Research Article / Araştırma Makalesi

Ekonomik ve Sosyal Araştırmalar Dergisi

The International Journal of Economic and Social Research

2024, 20(2)

Examination of The Relationship Between Consumers' Digital Footprint Awareness and Their Decision-Making Styles in Digital Marketing With The Structural Equality Model*

Dijital Pazarlamada Tüketicilerin Dijital Ayak İzi Farkındalıkları ile Karar Verme Tarzları Arasındaki İlişkinin Yapısal Eşitlik Modeli ile İncelenmesi

Ahmet TAŞ[1], **Halil İbrahim BÜLBÜL**[2]

Geliş Tarihi (*Received*): 10.02.2024 **Kabul Tarihi (*Accepted*):** 23.04.2024 **Yayın Tarihi (*Published*):** 30.12.2024

Abstract: The integration of digital technology with the internet has brought up various subjects and concepts. Individuals using the Internet create their digital footprints with their activities in the digital environment. With the help of digital footprint, political views, personality traits, potential beliefs, etc. can be predicted. This study was prepared to determine the level of impact of individuals' digital footprint awareness on their decision-making style when purchasing products online. The data were collected through an online survey and analyzed using SPSS and AMOS programs. The sample of the study included 607 individuals from different groups, and after eliminating outliers at the structural equation model stage, data from 461 participants were analyzed. As a result of the analysis, it was seen that participants were aware that their activities on the internet environment could affect them, they made decisions as they wished, some sub-dimensions had differences between genders, and generally there was no difference in demographic characteristics in terms of digital footprint awareness. Additionally, an analysis of demographic variables showed that there was a relationship between conscious awareness and digital footprint, and some sub-dimensions of consumer decision-making style and digital footprint.

Keywords: Digital footprint, Consumer decision-making styles, Digital marketing, Structural equality model, Awareness.

&

Özet: Dijital teknolojilerin internetle entegrasyonu, çeşitli konuları ve kavramları gündeme getirmiştir. İnternet kullanıcıları, dijital ortamda gerçekleştirdikleri aktivitelerle dijital izler bırakmaktadırlar. Bu dijital izler, bireylerin siyasi görüşleri, kişilik özellikleri ve potansiyel inançları gibi özelliklerini tahmin edilebilir hale getirmektedir. Bu araştırma, bireylerin dijital iz farkındalıklarının, internet üzerinden ürün satın alma kararlarını etkileme düzeyini belirlemek amacıyla yapılmıştır. Veriler, online anket yöntemiyle toplanmış ve analizler SPSS ve AMOS programları kullanılarak gerçekleştirilmiştir. Çalışmanın örnekleminde, farklı gruplardan 607 katılımcıya ulaşılmış ve yapısal eşitlik modeli aşamasında uç değerler çıkarılarak, 461 katılımcının verileri analiz edilmiştir. Yapılan analizler sonucunda, katılımcıların internet üzerindeki faaliyetlerinin kendilerini etkileyebileceği bilincinde oldukları, kendi tercihleri doğrultusunda kararlar verdikleri, bazı alt boyutlarda cinsiyetler arasında farklılıklar olduğu ve genel olarak dijital iz farkındalığı konusunda katılımcıların demografik özellikleri arasında anlamlı bir fark olmadığı görülmüştür. Ayrıca, demografik değişkenler üzerine yapılan analizde, dijital iz ile bilinçli farkındalık arasında ve dijital iz ile tüketici karar verme tarzlarının bazı alt boyutlarında ilişki olduğu tespit edilmiştir.

Anahtar Kelimeler: Dijital ayak izi, Tüketici karar verme tarzları, Dijital pazarlama, Yapısal eşitlik modeli, Farkındalık.

Atıf/Cite as: Taş, A. ve Bülbül, H. İ. (2024). Examination of The Relationship Between Consumers' Digital Footprint Awareness and Their Decision-Making Styles in Digital Marketing With The Structural Equality Model. *Ekonomik ve Sosyal Araştırmalar Dergisi*, 20(2), 409- 426.

İntihal-Plagiarism/Etik-Ethic: Bu makale, en az iki hakem tarafından incelenmiş ve intihal içermediği, araştırma ve yayın etiğine uyulduğu teyit edilmiştir. / This article has been reviewed by at least two referees and it has been confirmed that it is plagiarism-free and complies with research and publication ethics. https://dergipark.org.tr/tr/pub/ijaws

Copyright © Published by Bolu Abant Izzet Baysal University, Since 2005 – Bolu

* Bu çalışma Gazi Üniversitesi Bilişim Enstitüsü'nde Prof. Dr. Halil İbrahim BÜLBÜL danışmanlığında Ahmet TAŞ tarafından yapılan doktora tezinden türetilmiştir.

[1] Lect.. Dr. Ahmet TAŞ, Siran Dursun Keleş Health Services Vocational School, Pharmacy Services Department, Gumushane University, Gümüşhane, ahmettas@gumushane.edu.tr, Orcid No: https://orcid.org/0000-0002-1444-6068., (Sorumlu Yazar)

[2] Prof. Dr. Halil İbrahim Bülbül, Gazi University Computer Education and Instructional Technology, Ankara, bhalil@gazi.edu.tr, Orcid No: https://orcid.org/0000-0002-6525-7232

*This work is licensed under a Creative Commons Attribution 4.0 International License

1. Introduction

In today's era, marked by significant advancements in information and computer technologies, internet users leave traces through their online activities that can be analyzed to draw inferences. These traces are referred to as digital footprints (Lambiotte and Kosinski, 2014: 1935). Through digital footprints, inferences about individual characteristics such as personalities, political views, and potential consumption behaviors can be derived. Awareness of digital footprints enables the differentiation between positive and negative behaviors for potential future encounters based on online activities. Information accessed by third parties can include identity, address, deposit details, private photos, and any other information related to individuals. If accessed by malicious entities, exposure to adverse situations is quite natural. Therefore, understanding the implications of cookies on websites, limiting the sharing of personal information, and refraining from disclosing privacy-sensitive details contribute to fostering awareness in the digital realm. Digital footprints, which are challenging to erase, are derived from collective internet activities, postings on different platforms, internet search histories, and their outcomes.

Predicting users' personalities can be utilized to enhance a plethora of products and services. Digital systems can be designed to adjust their behaviors to best fit users' profiles. For example, in-car music parameters can be adjusted based on the driver's personality and current mood. Furthermore, the effectiveness of marketing and product recommendations can be improved by adding psychological dimensions to existing user models. For instance, when insurance companies encounter users sensitive to trust issues, they can emphasize security, while highlighting potential threats to emotionally stable individuals. However, digital footprints can provide a cost-effective and reliable way to measure psychological traits (Lambiotte and Kosinski, 2014: 1935). There is a strong relationship between digitally revealed preferences and behavior (Cerina and Duch, 2020: 988). The sensitivity towards advertising through internet channels has led to the need for new communication methods to attract the attention of consumers and engage with them. Brand loyalty has been identified as a more accurate indicator of consumers' product purchase intentions and a powerful indicator of consumer behavior (Paul and Bhakar, 2018: 154). Recent research on adult users has shown that digital footprints obtained from social network activities can be used to understand personal information such as age, gender, specific personality traits, and even certain mental health conditions such as depression and anxiety (Ophir et al., 2019: 63). Awareness of digital footprints means that individuals using the internet are aware that data such as search history, clicks, and saved personal information are recorded, allowing them to manage their online activities (Wook et al., 2019: 408; Soylu et al., 2021: 178).

The purpose of this study is to determine the relationship between consumers' awareness of their digital footprint and their decision-making styles in shopping. The obtained data were analyzed using parametric tests. Additionally, a structural equation model was applied due to the uneven distribution of the sample and the justification that the analysis results could be influenced by other variables. The structural equation model controls the impact of other variables and provides a clear result. In the established model, it is assumed that there is a relationship between individuals' digital footprints and conscious awareness, between conscious awareness and decision-making styles, and between digital footprints and decision-making styles.

2. Digital Footprint Concept

In the social world, a significant portion of daily behaviors and social interactions is increasingly becoming digital, occurring in online environments (Özsevinç and Yengin, 2021: 36). An unseen aspect of interactions in online environments is that a majority of behaviors are recorded and stored in digital records. Individuals and organizations use the clues left behind to make inferences about the users who create these records. For example, tracking online activities, a method employed in formal processes such as hiring, and forming an impression (or updating it) about an individual based on the accessed data is a common practice (bilimiletisimi.com). These interactions and records can vary from person to person. As a result, human

and computer-based interactions differ in many ways, yet each provides observable clues created by an individual in a specific environment.

Digital footprint consists of traces left by both online and offline activities on electronic platforms (Lambiotte and Kosinski, 2014: 1936). These traces encompass all clues related to the user transferred to the internet environment through actions such as typing, clicking, or touching on the keyboard, mouse, or screen (bilimiletisimi.com). Digital footprints prove to be effective predictors, facilitated by individuals' interactions. Nowadays, human activities such as social interactions, entertainment, shopping, and information seeking predominantly occur in the digital realm. Supported by advancements in hardware and software, as well as the emergence of computational social sciences, these traces of human activities can be used to derive highly personal insights into owners' preferences, habits, and psychological characteristics (Koçarslan and Kılınç, 2019: 1265). Actions such as browsing, commenting, updating status, and sharing videos and photos on social media platforms like Facebook, Twitter, LinkedIn, Google, YouTube, WhatsApp, Instagram, and Pinterest actively contribute to the creation of digital footprints. The resulting active digital footprints may include data voluntarily submitted online. For instance, in the process of sending an email, it is expected that the data will be seen or saved by another person, creating an active digital footprint for those individuals (Malhotra et al., 2012: 1067).

3. Digital Marketing

The shift of the shopping experience between producers and consumers to digital platforms, influenced by changes in consumer behavior, has given rise to the concept of digital marketing (Çelik and Taş, 2021a). The digital marketing platform brings together producers and consumers in the online environment, organizes activities for brand promotion, facilitates rapid communication between producers and consumers, and provides a platform for sharing product-related experiences and enhancing interaction (Alıjı, 2016). The advancement of the technology era has led to the digitalization of marketing analyses, emphasizing the necessity of digitalization in commercial activities (Akar and Kayahan, 2007).

The consumer decision-making process regarding purchases involves five stages: the emergence of a need, information gathering, ranking alternatives, making a purchase decision, and post-purchase evaluation (Şahin et al., 2020: 23). In digital marketing, consumer behavior is a crucial aspect emphasized in marketing, defined as the process where a consumer acquires a product or service to meet their needs, followed by sharing their experience and providing feedback related to the product (Torlak and Altunışık, 2012; Çelik and Taş, 2021b).

Table 1. Most Preferred Product Categories in E-commerce Worldwide (tuik.gov.tr)

Type	Total Annual Expenditure
Travel and Accommodation	593.6 billion dollars
Fashion and Beauty	665.6 billion dollars
Electronics and Physical Media	501.8 billion dollars
Food and Personal Care	413.8 billion dollars
Furniture and Home Goods	330.9 billion dollars
Toys and Hobbies	525.6 billion dollars
Digital Music	21.73 billion dollars
Video Games	135.8 billion dollars

4. Research Method and Hypotheses

In this study, a model, as presented in Figure 4.1, is proposed to determine the existence of a relationship between the digital footprint awareness of consumers engaging in digital marketing activities and their decision-making styles in shopping. According to this model, it is assumed that there is a relationship between individuals' digital footprints and their conscious awareness, between their conscious awareness and decision-making styles, and between their digital footprints and decision-making styles. The rationale for the model is based on the assumption that a consumer's digital footprint will impact their decision-making styles directly and through conscious awareness.

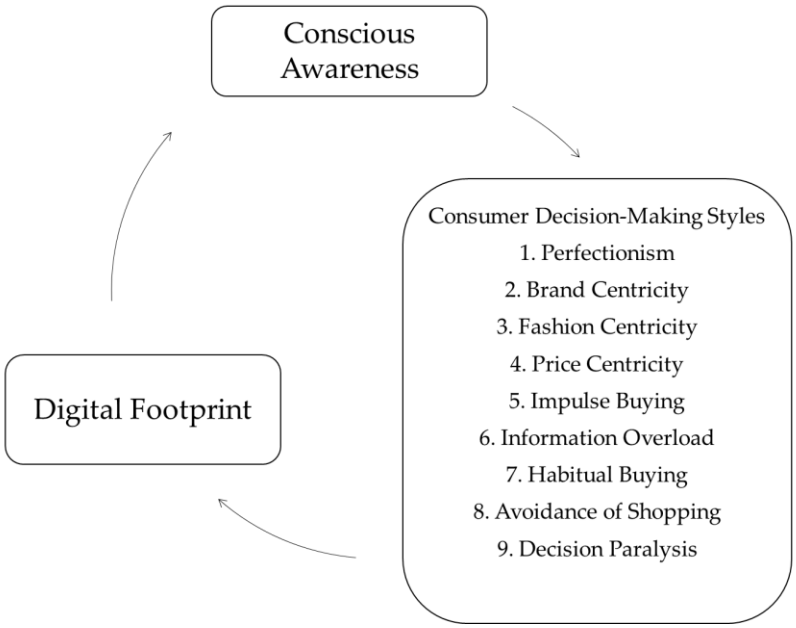

Figure 1. The model designed in the research

The factor that measures individuals' importance given to product quality during shopping (Dursun et al., 2013: 294) is perfectionism-high-quality focus; aiming to measure individuals' efforts to acquire the highest quality products. According to this sub-dimension, individuals with high perfectionism scores may engage in more careful shopping or compare products, and being merely good is not sufficient for their satisfaction. Products of moderate quality do not appeal to them, and they make efforts to purchase the highest quality product (Sproles and Kendall, 1986: 270).

H1: Digital footprint has an impact on perfectionism.

The factor that measures the tendency to prefer high-priced brands due to the prediction of the quality of products to be purchased through the brand's price and prestige is known as brand-centricity, which assesses the inclination to choose high-priced brands (Dursun et al., 2013: 294). Consumers deciding to purchase based on the brand tend to prefer more expensive and popular brands. This group of consumers believes that higher-priced products are of better quality and generally prefers the most well-known brands (Özden, 2019: 219). Brand-centric consumers believe that the quality is equivalent to the label of a product. In short, they consider the price as an indicator of quality. Therefore, these consumers show a positive attitude towards stores selling expensive and branded products and typically lean towards these stores and brands when making a purchase. For them, having products from a renowned brand implies usability (Sproles and Kendall, 1986: 270).

H2: Digital footprint has an impact on brand-centricity.

The factor that measures the extent to which individuals value the concept of fashion when making decisions during shopping is known as fashion-centricity, which assesses the inclination towards following fashion

trends (Dursun et al., 2013: 294). This sub-dimension implies a liking for keeping up with fashion. Consumers with this style tend to have a developed sense of appreciation for innovative products and want to follow new fashion trends. Consumers with this attitude are not very careful during the purchase process. They tend to make quick decisions without comparing with other products. Therefore, their price sensitivity is low. Not falling behind in fashion is important for these individuals (Sproles and Kendall, 1986: 270). Consumers with a fashion-centric decision-making style tend to purchase products that are currently in trend, regardless of their price or popularity during that period. These consumers may not consider the balance between price and quality because they are interested in the popularity of the product.

H3: Digital footprint has an impact on fashion-centricity.

The factor that focuses on individuals' attention to ensuring that product prices are not high during shopping and measures how carefully money is spent is known as price-centricity, which assesses the sensitivity towards the prices of products (Dursun et al., 2013: 294). Price-centricity is defined as individuals having sensitivity to price, examining discounts on products, and desiring to get full value for their spent money. Consumers with this attitude have knowledge of the market selling price of the product and aim to spend their money most efficiently. Consumers who compare prices when making a purchase fall within this dimension (Sproles and Kendall, 1986: 270). Individuals who focus on the price aspect in their shopping research products on sale and generally tend to lean towards products with lower prices. They strive to get the best products for their money (Raja and Malik, 2014: 21).

H4: Digital footprint has an impact on price-centricity.

The factor that measures individuals' lack of meticulousness in their purchasing behavior, indicating impulsive and thoughtless decision-making, is known as impulse buying, which assesses the tendency for unplanned and careless decision-making during shopping (Dursun et al., 2013: 294). Unconscious purchasing behaviors, where consumers unknowingly engage in various factors influencing their purchase decisions, constitute a significant portion of daily shopping behaviors (Raja and Malik, 2014: 21). This sub-dimension represents the attitude of consumers who make unplanned purchases and have no concern about the amount spent. Consumers engaging in impulsive shopping may experience regret over the products they purchased after shopping. Additionally, these consumers have a tendency to make purchases during their shopping spree. They are not concerned with whether they get value for the money spent (Sproles and Kendall, 1986: 270).

H5: Digital footprint has an impact on impulse buying.

The factor that measures the degree of confusion individuals experience in decision-making due to the excessive information provided about the products to be purchased is known as information overload, which assesses the level of mental confusion in decision-making (Dursun et al., 2013: 294). Although not severely, the confusion experienced during shopping situations affects the behaviors of shoppers. Information overload related to product stimuli leads to overload, similarity, and uncertainty (Çiçek and Mürütsoy, 2014: 294). Consumers consciously evaluate how much the shopping environment impedes or facilitates the shopping goal. Shopping environments that create confusion for consumers hinder reaching the shopping goal and thus reduce the value of the shopping experience. Studies also indicate that the shopping experience affects key outcome variables such as satisfaction, and subsequently, attitudinal loyalty, word-of-mouth communication, purchase share, customer share, and reevaluation (Özkan Pir and Yılmaz, 2020: 54).

H6: Digital footprint has an impact on information overload.

The factor measures individuals' tendency to periodically purchase their preferred brands (Dursun et al., 2013: 294). Habituality can be defined as the effort to find preferred brands and stores and to be able to buy products from these brands or shop from these stores. Consumers with this attitude have favorite brands and regularly prefer these brands when making a purchase. Therefore, they are not interested in different alternatives (Sproles and Kendall, 1986: 270).

H7: Digital footprint has an impact on habituality.

It measures the features of individuals disliking their shopping behavior and considering it a waste of time (Dursun et al., 2013: 294; Sproles and Sproles, 1990: 137). In some cases, individuals may not want to shop and may even consider the time spent shopping as a waste. In the literature review, it has been indicated that high shipping costs affect the preference for online shopping (Sürmelioğlu and Seferoğlu, 2019: 55), and the avoidance of shopping varies according to income levels and shopping budgets (Bayrakdaroğlu and Çakır, 2016: 283).

H8: Digital footprint has an impact on shopping avoidance.

It measures the difficulty consumers experience in decision-making and choosing (Dursun et al., 2013: 294; Sproles and Sproles, 1990: 137). Some consumers face difficulties in decision-making and choosing during their shopping experiences. In the literature review, it has been mentioned that consumers' perceived quality reduces the level of indecision (Şahin and Akballı, 2019: 82), university students have a low level of indecision in their shopping (Ünal and Aksu, 2020: 129), and consumers' indecision levels vary according to their shopping durations (Bayrakdaroğlu and Çakır, 2016: 283).

H9: Digital footprint has an impact on indecision.

One of the main subjects of the research is the examination of whether consciously performed behaviors of consumers affect their decision-making styles during shopping, leading to the creation of H10. Additionally, to investigate whether consciously performed behaviors of consumers during shopping affect their digital footprints, H11 has been formulated.

H10: Conscious awareness has an impact on consumer decision-making style.

H11: Digital footprint has an impact on conscious awareness.

5. Methodology

In this study, the simple random sampling method, which is one of the probability sampling methods, was preferred within the scope of quantitative research methods. Three scales were used in the research: the Consumer Decision-Making Styles Scale (Dursun et al., 2013) as the latent variable, the Digital Footprint Awareness Survey (Sürmelioğlu and Seferoğlu, 2019) as the observed variable, and the Conscious Awareness Scale (Özyeşil et al., 2011) as the mediating variable. Demographic characteristics determining items were analyzed using independent samples t-test, ANOVA test, and Post hoc-Tukey test in the SPSS program. The model of the research was developed based on the variables used in the study and the literature review conducted. The structural equation model was tested using the AMOS program. The structural equation model is a research conducted using the obtained data and aims to test the theoretical structure in the context of variables. Information about the scales used in the study and the data collection method is provided below. The limitation of the study is that it was only applied to individuals who shop online. Although 658 individuals with online shopping experience were reached in this study, some incorrectly and incompletely filled surveys were excluded from the research scope, and the surveys of a total of 607 participants were considered for evaluation.

Table 2. Distribution values of the scales

Scales	Kurtosis	Skewness
Consumer Decision Making Styles Scale	-0,110	0,640
Conscious Awareness	-0,108	0,070
Digital Footprint	-0,651	0,862

The distribution of the data was examined before the analysis stage. The Kolmogorov-Smirnov test resulted in a significance level of p>0.05 for the scales used in the study. Additionally, when examining skewness and kurtosis values, it was observed that these values were between -1.5 and +1.5 for both scales. This result indicates that the data is normally distributed (Marcé-Nogué et al., 2017). Therefore, parametric tests were used to obtain the statistics of the research. Due to the homogeneity between the examined sections (Levene Test F=0.192, P>0.05), and meeting the normal distribution assumption of the data (Kolmogorov-Smirnov=0.242, p>0.05) along with the number of groups, ANOVA was used for data analysis. Following this analysis, post-hoc test statistics were used to determine the source of the significant difference between the tested groups. Tukey test was applied due to the homogeneity of variances.

Table 3. Reliability coefficients of the scales

Scales	Coefficients
Consumer Decision Making Styles Scale	0,76
Conscious Awareness	0,83
Digital Footprint	0,78

6. Findings

While the sample size of the study is sufficiently large, most variables exhibit a normal distribution. However, when examining the multivariate normality coefficient, it is observed that the normal distribution is not very strong. One possible approach in this situation could be to perform the analysis using robust methods that can be applied in non-normal cases. Alternatively, given that the sample size is adequate, the ML (Maximum Likelihood) method has been employed by removing outliers based on the multiple Mahalanobis distances, which is a robust algorithm.

Table 4. Results of the first confirmatory factor analysis for the Consumer Decision Making Styles Scale

Matter		Size	β^1	β^2	S. error	Test ist.	p
T16	<---	K1	0,502	1,000			
T11	<---	K1	0,737	1,602	0,172	9,328	**<0,001**
T6	<---	K1	0,696	1,601	0,175	9,140	**<0,001**
T1	<---	K1	0,552	1,220	0,150	8,129	**<0,001**
T20	<---	K2	0,484	1,000			
T10	<---	K2	0,654	1,481	0,173	8,567	**<0,001**
T7	<---	K2	0,591	1,240	0,152	8,170	**<0,001**
T4	<---	K2	0,688	1,469	0,168	8,751	**<0,001**
T17	<---	K3	0,602	0,926	0,092	10,119	**<0,001**
T9	<---	K3	0,753	1,000			
T3	<---	K4	0,615	5,515	2,391	2,307	**0,021**

T12	<---	K4	0,153	1,000			
T2	<---	K5	0,465	0,891	0,152	5,870	**<0,001**
T14	<---	K5	0,622	1,000			
T18	<---	K6	0,768	0,981	0,085	11,550	**<0,001**
T5	<---	K6	0,686	1,000			
T19	<---	K7	0,853	1,156	0,103	11,213	**<0,001**
T15	<---	K7	0,653	1,000			
T22	<---	K9	0,762	1,441	0,168	8,583	**<0,001**
T13	<---	K9	0,525	1,000			

β^1: standardized beta coefficient, β^2: unstandardized beta coefficient. K1: Perfectionism, K2: Brand Centricity, K3: Fashion Centricity, K4: Price Centricity, K5: Impulse Buying, K6: Habitual Buying, K7: Information Overload, K9: Decision Paralysis

An analysis of the first-order confirmatory factor with a total of 22 items revealed that initially, when examining the significance of path coefficients for each item, the impact of item T8 on factor K8 was not statistically significant (p=0.853). As T8 was not found to be significant, it was removed from the scale. Additionally, since having only one item under a factor is not appropriate, item T21 was also removed, resulting in the exclusion of factor K8 from the scale. The path coefficients obtained after excluding factor K8 are presented in Figure 5.1. When examining the fit values, CMIN/DF=2.47, GFI=0.929, IFI=0.907, TLI=0.973, CFI=0.905, RMSEA=0.057, SRMR=0.054 were obtained. All fit indices were within acceptable limits. Furthermore, all path coefficients for the items were found to be statistically significant (p<0.001).

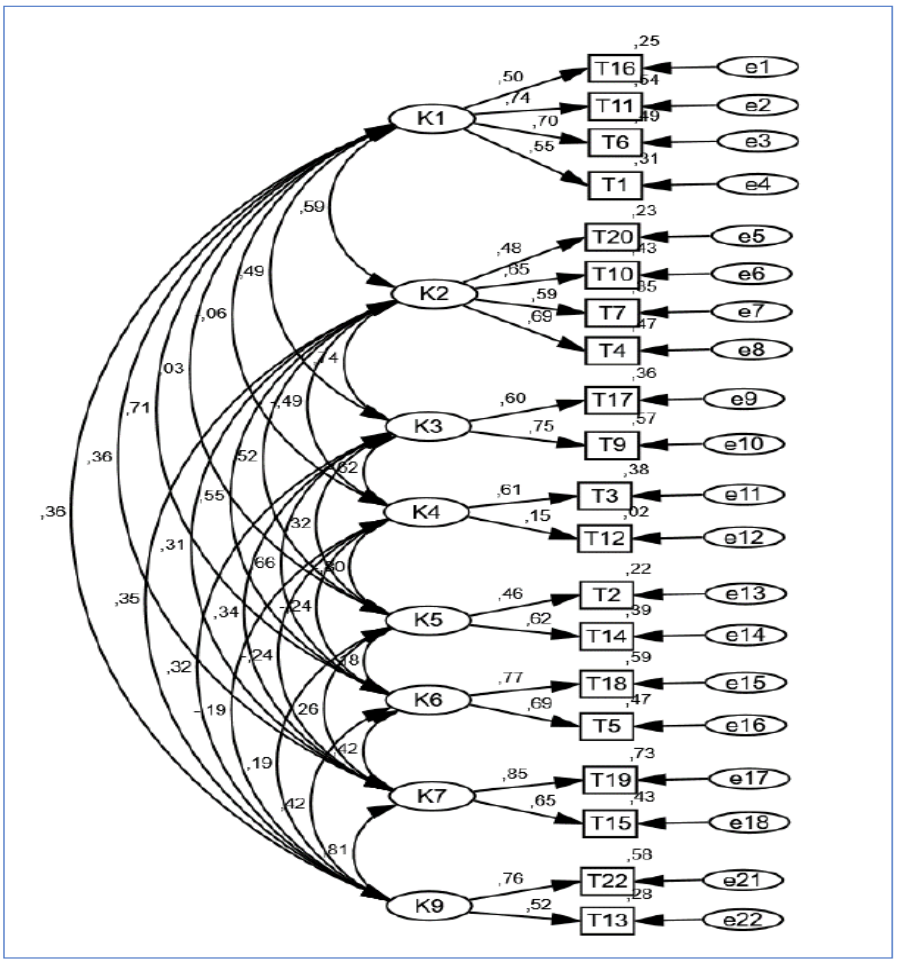

Figure 2. Standardized Path Coefficients for Consumer Decision-Making Styles

The analysis conducted in the study was tested using various methods. Among the preferred statistics, if $\chi 2/df < 2$, it indicates perfect fit, and if $\chi 2/df < 5$, it suggests acceptable fit.

Table 5. Confirmatory Factor Analysis Results of Consumer Decision Making Styles Scale

Model Fit Indices	Perfect Interval	Acceptable Range	CDMSS
X^2/df	$0<X^2/df<2$	$2<X^2/df<5$	2,47
RMSEA	0,00<RMSEA<0,05	0,05<RMSEA<0,10	0,057
GFI	0,90<GFI<1,00	0,85<GFI<0,90	0,929
CFI	0,95<CFI<1,00	0,90<CFI<0,95	0,905
IFI	0,95<IFI<1,00	0,90<IFI<0,95	0,907
TLI	0,95<TLI<1,00	0,90<TLI<0,95	0,973
SRMR	0,00<SRMR<0,05	0,05<SRMR<0,08	0,054

p>.05, X2= Chi-Square; df= Degrees of Freedom; GFI= Goodness of Fit Index; CFI= Comparative Fit Index; RMSEA= Root Mean Square Error of Approximation; IFI= Incremental Fit Index; TLI= Tucker-Lewis Index; SRMR= Standardized Root Mean Residual (Marcé-Nogué vd., 2017).

When the results of the confirmatory factor analysis of the Consumer Decision Making Styles Scale are examined, it is observed that the GFI and TLI indices are in the excellent range, while all other indices are in the acceptable range. Since the obtained values fall within the specified limits, the statistical analysis findings are considered valid.

Table 6. Results of the one-factor confirmatory factor analysis of the Conscious Awareness Scale

Matter		Size	β1	β2	S. error	Test ist.	p
B1	<---	CAS	0,357	1,000			
B2	<---	CAS	0,472	1,387	0,227	6,108	**<0,001**
B3	<---	CAS	0,628	1,835	0,271	6,768	**<0,001**
B4	<---	CAS	0,522	1,841	0,289	6,358	**<0,001**
B5	<---	CAS	0,472	1,550	0,254	6,096	**<0,001**
B6	<---	CAS	0,383	1,294	0,234	5,521	**<0,001**
B7	<---	CAS	0,564	1,765	0,270	6,525	**<0,001**
B8	<---	CAS	0,643	1,975	0,290	6,809	**<0,001**
B9	<---	CAS	0,472	1,600	0,263	6,087	**<0,001**
B10	<---	CAS	0,654	2,118	0,309	6,843	**<0,001**
B11	<---	CAS	0,394	1,244	0,222	5,607	**<0,001**
B12	<---	CAS	0,570	1,735	0,264	6,562	**<0,001**
B13	<---	CAS	0,411	1,303	0,228	5,714	**<0,001**
B14	<---	CAS	0,623	1,882	0,279	6,753	**<0,001**
B15	<---	CAS	0,513	1,709	0,270	6,318	**<0,001**

β1: Standardized beta coefficient, β2: Unstandardized beta coefficient, CAS: Conscious Awareness Scale

Total 15 item one-dimensional confirmatory factor analysis results of the conscious awareness scale were examined, after three different modification processes, the fit values obtained are as follows: CMIN/DF=2,418, GFI=0,923, IFI=0,907, TLI=0,859, CFI=0,902, RMSEA=0,056, SRMR=0,051. All fit indices except TLI are within acceptable limits. The TLI fit index is obtained close to acceptable limits. In addition, it has been determined that all path coefficients of the items are statistically significant (p<0.001). While B10 item has the highest impact on the scale, B1 item has the lowest impact.

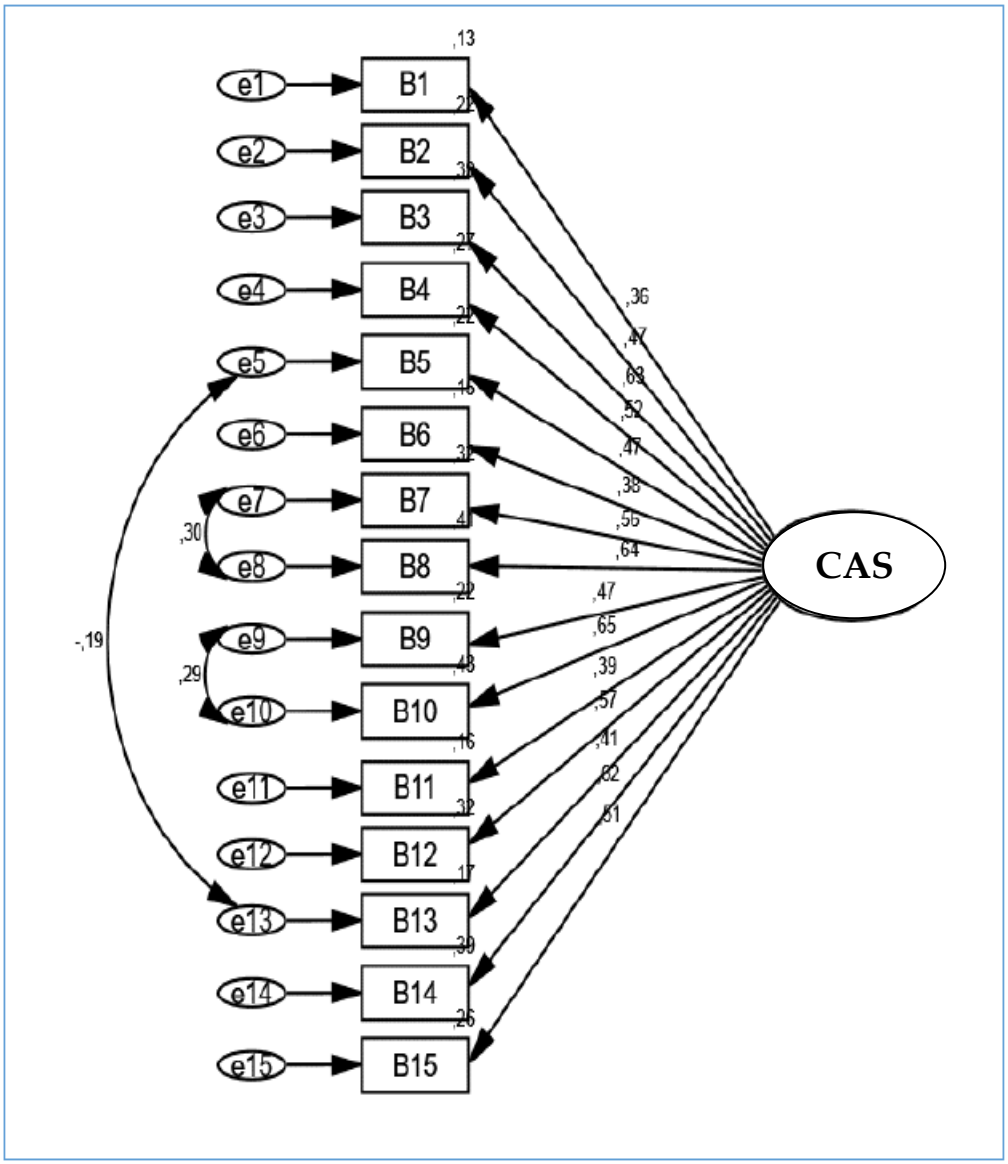

Figure 3. Standardized path coefficient of the Conscious Awareness Scale

When the statistical values of the confirmatory factor analysis of the Conscious Awareness Scale are examined, it is observed that all observed variables have a significant effect.

Table 7. Results of the Confirmatory Factor Analysis of the Conscious Awareness Scale

Model Fit Indices	Perfect Interval	Acceptable Range	CAS
X^2/df	$0<X^2/df<2$	$2<X^2/df<5$	2,418
RMSEA	0,00<RMSEA<0,05	0,05<RMSEA<0,10	0,056
GFI	0,90<GFI<1,00	0,85<GFI<0,90	0,923
CFI	0,95<CFI<1,00	0,90<CFI<0,95	0,902
IFI	0,95<IFI<1,00	0,90<IFI<0,95	0,907
TLI	0,95<TLI<1,00	0,90<TLI<0,95	0,859
SRMR	0,00<SRMR<0,05	0,05<SRMR<0,08	0,051

p > .05, X2=Chi-Square; df=Degrees of Freedom; GFI=Goodness of Fit Index; CFI=Comparative Fit Index; RMSEA=Root Mean Square Error of Approximation; IFI=Incremental Fit Index; TLI=Tucker-Lewis Index; SRMR=Standardized Root Mean Residual (Marcé-Nogué et al., 2017).

The results of the confirmatory factor analysis of the Conscious Awareness Scale indicate that the GFI index is in the excellent range, and all indices except TLI are within an acceptable range. The obtained values are valid in terms of statistical analysis findings.

Table 8. Results of the Single-Factor Confirmatory Factor Analysis

Matter		Size	β1	β2	S. error	Test sta.	p
D1	<---	DFAS	0,470	0,876	0,112	7,841	**<0,001**
D2	<---	DFAS	0,700	1,224	0,123	9,975	**<0,001**
D3	<---	DFAS	0,855	1,424	0,131	10,854	**<0,001**
D4	<---	DFAS	0,830	1,367	0,127	10,745	**<0,001**
D5	<---	DFAS	0,562	1,048	0,119	8,830	**<0,001**
D6	<---	DFAS	0,618	1,169	0,125	9,334	**<0,001**
D7	<---	DFAS	0,329	0,985	0,164	6,011	**<0,001**
D11	<---	DFAS	0,626	1,111	0,118	9,411	**<0,001**
D12	<---	DFAS	0,501	1,000			

β1: Standardized beta coefficient, β2: Unstandardized beta coefficient, DFAS: Digital Footprint Awareness Scale

The results of the confirmatory factor analysis of the Digital Footprint Awareness Scale, which consists of a total of 12 items, indicate that items D8 and D9 were not significant, so they were removed from the scale (p-values were 0.306 and 0.785, respectively). Additionally, the path coefficient for item D10 was negative, so it was also removed from the scale. Thus, items D8, D9, and D10 were excluded from the scale. The results after these modifications are presented in Table 6.17. After 2 modification processes, the obtained fit indices are CMIN/DF=3.34, GFI=0.963, IFI=0.962, TLI=0.945, CFI=0.962, RMSEA=0.071, SRMR=0.039. All fit indices are within acceptable limits, and all path coefficients for the items are statistically significant (p<0.001).

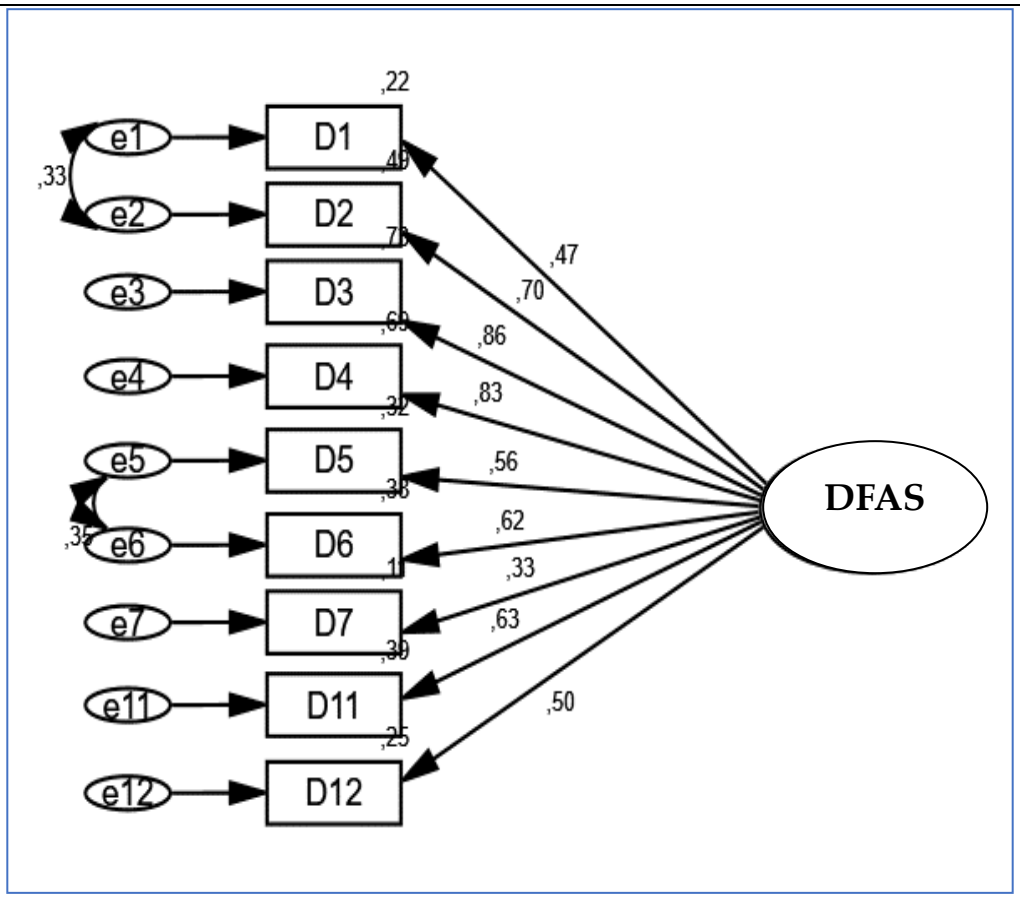

Figure 4. Standardized path coefficient of the Digital Footprint Scale

When examining the statistical values of the confirmatory factor analysis of the Digital Footprint Scale, it can be observed that all variables have a significant effect.

Table 9. Results of the Confirmatory Factor Analysis of the Digital Footprint Scale

Model Fit Indices	Perfect Interval	Acceptable Range	DFAS
X^2/df	$0<X^2/df<2$	$2<X^2/df<5$	3,340
RMSEA	0,00<RMSEA<0,05	0,05<RMSEA<0,10	0,071
GFI	0,90<GFI<1,00	0,85<GFI<0,90	0,963
CFI	0,95<CFI<1,00	0,90<CFI<0,95	0,962
IFI	0,95<IFI<1,00	0,90<IFI<0,95	0,962
TLI	0,95<TLI<1,00	0,90<TLI<0,95	0,945
SRMR	0,00<SRMR<0,05	0,05<SRMR<0,08	0,039

p > .05, X2 = Chi-Square; df = Degrees of Freedom; GFI = Goodness of Fit Index; CFI = Comparative Fit Index; RMSEA = Root Mean Square Error of Approximation; IFI = Incremental Fit Index; TLI = Tucker-Lewis Index; SRMR = Standardized Root Mean Square Residual (Marcé-Nogué et al., 2017).

When the confirmatory factor analysis results of the Digital Footprint Awareness Scale are examined, it is observed that GFI, CFI, IFI, and SRMR indices are in the excellent range, and all other indices are within the

acceptable range. Since the obtained values fall within the specified limits, the findings are valid in terms of statistical analysis.

Tablo 10. Total, Direct, and Indirect Effects Examination of the Model

Dependent Variable	Total Effect		R^2
	Digital footprint	Conscious awareness	
	β (%95 CI)	β (%95 CI)	
Conscious awareness	0,136 (0,045; 0,224)*	---	0,019
Perfectionism	0,202 (0,107; 0,299)*	-0,08 (-0,181; 0,022)**	0,091
Brand Centricity	-0,156 (-0,254; -0,051)*	-0,062 (-0,154; 0,03)**	0,117
Fashion Centricity	-0,033 (-0,131; 0,064)**	-0,082 (-0,177; 0,011)**	0,093
Price Centricity	0,142 (0,035; 0,259)*	0,036 (-0,049; 0,124)**	0,088
Impulse Buying	-0,184 (-0,262; -0,101)*	-0,299 (-0,385; -0,205)*	0,152
Habitual Buying	0,098 (0,01; 0,184)*	-0,092 (-0,179; 0)**	0,169
Information Overload	0,02 (-0,07; 0,11)**	-0,253 (-0,351; -0,15)*	0,079
Decision Paralysis	0,008 (-0,086; 0,099)**	-0,132 (-0,231; -0,027)*	0,046

β (%95 CI): standardized effect (Bootstrap 95% Confidence Interval), Demographic variables were taken as a confounding variable, *p<0.050, **p>0.050

The total effect of digital footprint on conscious awareness is obtained as 0.136 and found to be statistically significant (p<0.050). Digital footprint has a positive effect on conscious awareness. The total effect of digital footprint on perfectionism is obtained as 0.202 and found to be statistically significant (p<0.050). Digital footprint has a positive effect on perfectionism. The total effect of digital footprint on brand focus is obtained as -0.156 and found to be statistically significant (p<0.050). Digital footprint has a negative effect on brand focus. The total effect of digital footprint on fashion focus is obtained as -0.033 and found not to be statistically significant (p>0.050). The total effect of digital footprint on price focus is obtained as 0.142 and found to be statistically significant (p<0.050). Digital footprint has a positive effect on price focus. The total effect of digital footprint on impulse buying is obtained as -0.184 and found to be statistically significant (p<0.050). Digital footprint has a negative effect on impulse buying. The total effect of digital footprint on habit is obtained as 0.098 and found to be statistically significant (p<0.050). Digital footprint has a positive effect on habit. The total effect of digital footprint on information overload is obtained as 0.020 and found not to be statistically significant (p>0.050). The total effect of digital footprint on indecision is obtained as 0.008 and found not to be statistically significant (p>0.050). The total effect of conscious awareness on perfectionism is obtained as -0.080 and found not to be statistically significant (p>0.050). The total effect of conscious awareness on brand focus is obtained as -0.062 and found not to be statistically significant (p>0.050). The total effect of conscious awareness on fashion focus is obtained as -0.082 and found not to be statistically significant (p>0.050). The total effect of conscious awareness on price focus is obtained as 0.036 and found not to be statistically significant (p>0.050). The total effect of conscious awareness on impulse buying is obtained as -0.299 and found to be statistically significant (p<0.050). Conscious awareness has a negative effect on impulse buying. The total effect of conscious awareness on habit is obtained as -0.092 and found not to be statistically significant (p>0.050). The total effect of conscious awareness on information overload is obtained as -0.253 and found to be statistically significant (p<0.050). Conscious awareness has a negative effect on information overload. The total effect of conscious awareness on indecision is obtained as -0.132 and found to be statistically significant (p<0.050). Conscious awareness has a negative effect on indecision.

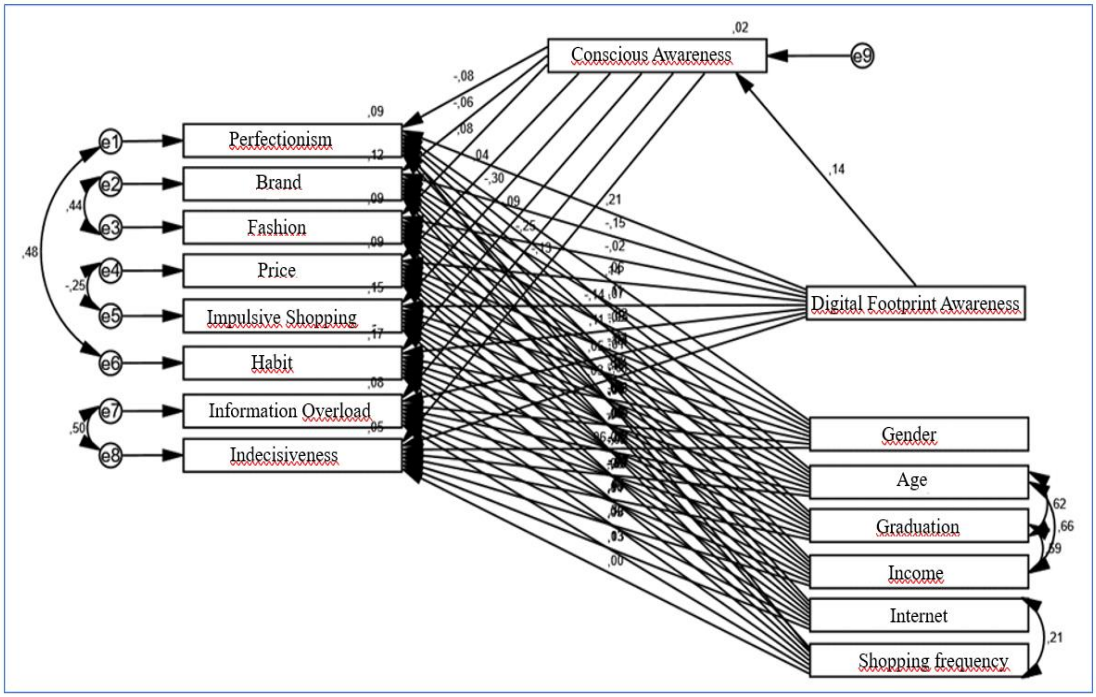

Figure 5. Standardized Path Coefficient for the Model

The total effect of the digital footprint on conscious awareness is obtained as 0.136 and found to be statistically significant (p<0.050). Digital footprint has a positive effect on conscious awareness. The total effect of the digital footprint on consumer decision-making styles is obtained as 0.026 and found not to be statistically significant (p>0.050). The total effect of conscious awareness on consumer decision-making styles is obtained as -0.166 and found to be statistically significant (p<0.050). Conscious awareness has a negative effect on consumer decision-making styles.

The β coefficient indicates the type of effect a one-unit increase in the independent variable has on the dependent variable. Upon examining the obtained values, a positive relationship is observed between conscious awareness and digital footprint awareness (β=0.019; p<0.05). In this context, a one-unit increase in conscious awareness leads to a 0.019 unit increase in digital footprint awareness. This result indicates that an individual with conscious awareness also possesses digital footprint awareness. When examining the relationship between consumer decision-making styles and digital footprint, there is a positive relationship between them (β=0.203; p<0.05). However, a one-unit increase in consumer decision-making styles dimensions leads to a 0.203 unit increase in digital footprint awareness.

Table 11. Evaluation of Hypotheses

Hypothesis	**Standardize β**	**p**	**Support/Reject**
H1: Digital footprint has an effect on perfectionism.	0,213	**<0,001**	Supported
H2: Digital footprint has an effect on brand focus.	-0,147	**<0,001**	Supported
H3: Digital footprint has an effect on fashion focus.	-0,022	**0,622**	Not Supported
H4: Digital footprint has an effect on price focus.	0,137	**0,002**	Supported
H5: Digital footprint has an effect on impulsive shopping.	-0,143	**<0,001**	Supported
H6: Digital footprint has an effect on information overload.	0,055	**0,627**	Not Supported
H7: Digital footprint has an effect on habit.	0,110	**0,010**	Supported
H8: Digital footprint has an effect on shopping avoidance.	0,065	**0,853**	Not Supported
H9: Digital footprint has an effect on indecision.	0,026	**0,578**	Not Supported
H10: Conscious awareness has an effect on consumer decision-making style.	-0,186	**<0,001**	Supported
H11: Digital footprint has an effect on conscious awareness.	0,136	**0,003**	Supported

Structural equation modeling applied and it was observed that the p-value for hypotheses H3, H6, H8, and H9 is greater than 0.050. However, the rest of the hypotheses have p-values less than 0.050. Therefore, the first hypothesis "there is a relationship between digital footprint and perfectionism" (H1), the second hypothesis "digital footprint has an effect on brand focus" (H2), the fourth hypothesis "digital footprint has an effect on price focus" (H4), the fifth hypothesis "digital footprint has an effect on impulsive shopping" (H5), the seventh hypothesis "digital footprint has an effect on habit" (H7), the tenth hypothesis "conscious awareness has an effect on consumer decision-making style" (H10), and the eleventh hypothesis "digital footprint has an effect on conscious awareness" (H11) are accepted.

In the conducted analyses, it was found that the p-value for the third hypothesis "digital footprint has an effect on fashion focus" (H3), the sixth hypothesis "digital footprint has an effect on information overload" (H6), and the ninth hypothesis "digital footprint has an effect on indecisiveness" (H9) is greater than 0.050. The eighth hypothesis "digital footprint has an effect on avoidance of shopping" (H8), derived from the eighth subscale excluded from the analysis, was not accepted.

7. Conclusion

In this study, which aimed to examine the level of digital footprint awareness through the conscious awareness of consumers in their decision-making styles for online shopping, the findings of the research are presented in this section.

According to the results of the structural equation model, 7 out of 11 hypotheses were accepted, and 4 were rejected. When considering the accepted hypotheses, it is observed that digital footprint has an impact on perfectionism, brand orientation, price orientation, impulse buying, and habit; conscious awareness has an impact on consumer decision-making styles, and digital footprint has an impact on conscious awareness. In this regard, individuals who are perfectionists, brand-oriented, price-oriented, engage in impulse buying, and have habits are aware of the potential consequences of their online activities. It can be inferred that individuals who are meticulous in shopping also exhibit meticulous behavior in their digital activities. Moreover, individuals with awareness tend to make decisions differently in their shopping, and those with digital footprint awareness generally have awareness in various aspects of life.

When considering the rejected hypotheses, it is observed that the digital footprint does not have an impact on fashion orientation, information overload in life, shopping avoidance, and indecisiveness. In this case, individuals who consider which products are fashionable in their shopping may not be concerned about the traces they leave in the digital environment to follow fashion trends. It can be inferred that individuals who are confused during shopping due to existing information are likely to enter more websites to obtain clearer information. In such a situation, individuals who do not hesitate to enter numerous websites may not be sensitive to their digital footprint. Additionally, individuals avoiding shopping may not value their digital footprints, and those who do not spend time on shopping sites may not share their information. It can also be suggested that individuals who are indecisive in their shopping may browse shopping sites to make a decision, and consequently, they do not hesitate to leave their digital footprints on different sites.

The importance of the digital footprint concept may not be given much attention by users today, but there are even business sectors dedicated to this field. When considering the rejected hypotheses, it may be beneficial for businesses to pay less attention to variables corresponding to the rejected hypotheses and focus more on other variables. Companies analyzing people's digital footprints to create marketing strategies have emerged. It is crucial to recognize that the data obtained should not be used solely for marketing purposes. Considering that high-probability inferences can be made about various aspects of individuals, including their political preferences, through their digital footprints, there should be a greater emphasis on conducting more scientific research in this field.

References

Akar, E., ve Kayahan, C. (2007). Electronic Commerce and Electronic Business. Ankara: Nobel Publishing Distribution.

Alıjı, F. (2016). The relationship between digital marketing and brand loyalty: a review of online shopping sites. Master's Thesis, Marmara University Social Sciences Institute, Istanbul.

Bayrakdaroğlu, F. ve Çakır, H. (2016). A Research to Examine Consumers' Decision-Making Styles Regarding Online Shopping. *Mehmet Akif Ersoy University Social Sciences Institute Journal*,8(15), 266-284.

Cerina, R., and Duch, R. (2020). Measuring public opinion via digital footprints. *International Journal of Forecasting*, 36(3), 987-1002.

Çelik, K., & Taş, A. (2021a). Investigation of Factors Affecting Consumer Behaviors Before Purchase: A Research on Instagram Shoppers. *Journal of Business Research-Turk*, 13(4), 3821–3834. https://doi.org/10.20491/isarder.2021.1358.

Çelik, K., Taş, A. (2021b) Investigating the Intention to Continue Using Mobile Shopping Applications in E-Commerce: Expanded Technology Acceptance Model, *Third Sector Journal of Social Economy*, 56(3), 1997- 2019.

Çiçek, R. ve Mürütsoy, M. (2014). A Research on Examining the Purchasing Behavior of Internet Consumers. *Cumhuriyet University Journal of Economics and Administrative Sciences*, 15(2), 291-305.

Dursun, İ., Alnıaçık, Ü. ve Kabadayı, E. T. (2013). Tüketici Karar Verme Tarzları Ölçeği: Yapısı ve Boyutları. Uluslararası Yönetim İktisat ve İşletme Dergisi, 9(19), 293-304.

Internet: Akkoyunlu, B. My digital footprint. URL: http://www.bilimiletisimi.com/show.php. Last access date: 17.12.2022.

Internet: Tuik, Household Information Technologies Usage Survey, URL: https://data.tuik.gov.tr/Bulten/Index?p=Hanehalki-Bilisim-Teknolojileri-(BT)- Kullanim-Arastirmasi-2020-, Last access date: 13.01.2022.

Koçarslan, H. ve Kılınç, H. (2019). Consumer perception in digital marketing, a research on online shopping. *European Journal of Science and Technology*, 17, 1263-1273.

Lambiotte, R. and Kosinski, M. (2014). Tracking the digital footprints of personality. Proceedings of the IEEE, 102(12), 1934-1939.

Malhotra, A., Totti, L., Meira Jr, W., Kumaraguru, P. and Almeida, V. (2012). Studying user footprints in different online social networks. In 2012 IEEE/ACM International Conference on Advances in Social Networks Analysis and Mining, 1065-1070.

Marcé-Nogué, J., De Esteban-Trivigno, S., Püschel, T. A. and Fortuny, J. (2017). The intervals method: a new approach to analyse finite element outputs using multivariate statistics. *PeerJ*, 5, e3793.

Ophir, Y., Asterhan, C. S. and Schwarz, B. B. (2019). The digital footprints of adolescent depression, social rejection and victimization of bullying on Facebook. *Computers in Human Behavior*, 91, 62-71.

Özkan Pir, E. ve Yılmaz, F. (2020). Investigation of the relationship between demographic variables and consumers decision making styles. *Cumhuriyet University Journal of Economics and Administrative Sciences*, 21(1), 52-67.

Özsevinç, N. ve Yengin, D. (2021). Media Literacy Phenomenon in the Digital World: Gelişim Evi Sports Club. *New Media Electronics Magazine*, 5(1), 35-48.

Özyeşil, Z., Arslan, C., Kesici, Ş. ve Deniz, M. E. (2011). A study on adapting the mindfulness scale to Turkish. *Education and Science*, 36(160), 224-235.

Paul, J. and Bhakar, S. (2018). Does celebrity image congruence influences brand attitude and purchase intention?. *Journal of Promotion Management*, 24(2), 153-177.

Raja, J. I. and Malik, J. A. (2014). Personality dimensions and decision making: exploring consumers' shopping styles. *Journal of Behavioural Sciences*, 24(2), 18-33.

Soylu, M. Y., Demiröz, S. ve Akkoyunlu, B. (2021). Examining the Digital Footprint Awareness and Experiences of Secondary School Students. *Journal of Computer and Education Research*, 9(17), 177-198.

Sproles, E. K. and Sproles, G. B. (1990). Consumer decision◎making styles as a function of individual learning styles. *Journal of Consumer Affairs*, 24(1), 134-147.

Sproles, G. B. and Kendall, E. L. (1986). A Methodology For Profiling Consumers Decision◎Making Styles. *The Journal of Consumer Affairs*, 20(2): 267-279.

Surmelioglu, Y. and Seferoglu, S. S. (2019). An Examination of Digital Footprint Awareness and Digital Experiences of Higher Education Students. *World Journal on Educational Technology: Current Issues*, 11(1), 48-64.

Şahin, B. G. ve Akballı, E. E. (2019). Factors affecting consumer behavior and method analysis. International *Journal of Social Sciences and Education*, 1(1), 43-85.

Şahin, E., Attar, M. and Niavand, A. (2020). The Influence of Advertising on Brand Equity of Chabahar Free Zone Tourism Destination (Iran). *Istanbul Management Journal*, (88), 21-55.

Torlak, Ö., ve Altunışık, R. (2012). Marketing Strategies, A Managerial Approach. 2nd Edition. Istanbul: Beta Basım Publishing.

Ünal, H. ve Aksu, A. (2020). Investigating the Relationship Between Sportswear Brand Consumers' Decision Making Styles and Brand Loyalty. *Journal of Physical Education and Sports Sciences*, *14*(2), 118-132.

Wook, T. S. M., Mohamed, H., Noor, S. F. M., Muda, Z. and Zairon, I. Y. (2019). Awareness of digital footprint management in the new media amongst youth. Jurnal Komunikasi: Malaysian Journal of Communication, 35(3), 407-421.