International Journal of Social Inquiry *15*(1), 2022, pp.1–20
journal homepage: https://dergipark.org.tr/en/pub/ijsi

E-ISSN: 1307-9999

International Journal of
Social Inquiry
International Peer-Reviewed Open Access Electronic Journal

Volume 15
Issue 1
June 2022

RESEARCH ARTICLE / Araştırma Makalesi
https://doi.org/10.37093/ijsi.951910

The Effect of Trust Among Employees on Dysfunctional Behavior and the Mediating Role of Management's Positive Behavior: A Theory of Values Analysis

İbrahim Durmuş*

Abstract

In the activities of the employees in an organization, trust, positive behavior, and dysfunctional behavior can be investigated as a whole, in addition to the universal principles of the theory of values. In previous studies, the concepts of trust among colleagues (TYC), dysfunctional behavior (EDB), and positive behavior of management towards employees (PBM) in organizations were examined separately in different areas. Unlike in previous studies, these concepts were, in this study, applied together to employees in different organizations. In this research, employees' trust in one another positively and significantly affected their dysfunctional behavior. Employees' trust in one another also positively and significantly affected their management's positive behavior towards employees. The positive behavior of the management towards their employees in turn affected the dysfunctional behavior of the employees in a positive and meaningful way. In the study, the positive behavior of the management towards their employees had a full mediator effect on the impact of employees' trust one another on employees' dysfunctional behaviors.

Keywords: Theory of values, trust, dysfunctional behavior, positive behavior of management, organization.

Jel Codes: M12, M14, M19.

Cite this article: Durmuş, İ. (2022). The effect of trust among employees on dysfunctional behavior and the mediating role of management's positive behavior: A theory of values analysis. *International Journal of Social Inquiry 15*(1), 1–20. https://doi.org/10.37093/ijsi.951910

* Lecturer PhD at the Vocational School of Social Sciences, Gümüşhane University, Gümüşhane/Türkiye.
E-mail: ibrahimdurmus@gumushane.edu.tr, ORCID: https://orcid.org/0000-0002-3872-2258.

Article Information
Received 13 June 2021; Revised 20 Nov 2021; Last Revised 04 April 2022; Accepted: 5 April 2022; Available online: 30 June 2022

This is an open access article under the Creative Commons Attribution-NonCommercial Licence.
© 2022 The Author. Published by Institute of Social Sciences on behalf of Bursa Uludağ University

Çalışanların Güven Davranışlarının İşlevsiz Davranışları Üzerindeki Etkisinde Yönetimin Olumlu Davranışının Aracı Rolü: Değer Kuramı Analizi

Öz

Değerler kuramının evrensel ilkelerinin yanında çalışanların organizasyon içerisindeki faaliyetlerinde; güven, olumlu davranış ve işlevsiz davranışlar bir bütün olarak araştırılabilir. Daha evvel gerçekleştirilen çalışmalarda organizasyonlarda çalışma arkadaşlarının birbirlerine olan güvenleri (TYC), işlevsiz davranışları (EDB) ve yönetimin çalışanlara olumlu davranışları (PBM) kavramları ayrı ayrı farklı alanlarda incelenmiştir. Araştırmada önceki çalışmalardan farklı olarak bu kavramlar bir bütün halinde farklı organizasyonlarda çalışanlara uygulanmıştır. Araştırma sonuçları çalışanların birbirlerine olan güvenlerinin işlevsiz davranışlarını pozitif ve anlamlı olarak etkilediğini göstermiştir. Çalışanların birbirlerine olan güvenleri yönetimlerinin çalışanlara karşı olumlu davranışlarını pozitif ve anlamlı olarak etkilemiştir. Yönetimin çalışanlarına karşı olumlu davranışları ise çalışanların işlevsiz davranışlarını pozitif ve anlamlı bir şekilde etkilemiştir. Araştırmada ayrıca çalışanların iş yerlerinde birbirlerine olan güvenlerinin işlevsiz davranışları üzerindeki etkisinde yönetimin çalışanlarına karşı olumlu davranışları tam aracı etkiye sahip olmuştur.

Anahtar Kelimeler: Değerler kuramı, güven, işlevsiz davranış, yönetimin olumlu davranışı, organizasyon.

Jel Kodları: M12, M14, M19.

1. Introduction

Values are structured similarly between different groups. This shows that there is a universal organization of human motivations. However, although the nature and structure of values are universal, individuals and groups may differ in the importance they attribute to values. This situation reveals that individuals or groups have different value priorities or hierarchies (Schwartz, 2012, p. 3). The structure of individual values affects the conceptual structure of values based on similarities and differences. For example, pleasure and living comfortably are part of the sphere of pleasure, while equality and charity are part of the social sphere. Values as a structure also include the relations of compatibility and contradictions between value fields. If simultaneously giving high priority to values (such as pleasure and prosociality) is practically or logically contradictory, then the two different areas are conceptually distant. If giving high priority to values in two fields is compatible (such as security and convenience), these two fields are conceptually close (Schwartz & Bilsky, 1987, p. 550). This situation can be evaluated in terms of the mutual relationship behavior of employees within the organization. Since the trust of the employees in the organization and the positive behavior of the management towards employees can be considered high priority, these two concepts are compatible and close. This situation reveals that both the concepts of both trust and positive behavior of the management towards the employee can be evaluated in a contradictory and conceptually distant way with the dysfunctional behavior. In this research, the positive side of the employees in the organization in terms of values is trust and the positive behavior of the management, and the negative side is the behavior of dysfunction.

In the literature, it is emphasized that there is an important relationship between values and behavior in terms of the theory of values (Bardi & Schwartz, 2003, p. 1218). Many types of behavior that are considered valuable in organizations can shape how employees relate to one another. Confidence and positive behavior in an organization can be characterized as desired values, while dysfunctional behavior can be characterized as an undesirable value or a worthless concept. In this respect, today's working environments consist of dynamic structures in which employees can develop a sense of trust towards each other. Since the employees in these structures are human, they can also exhibit dysfunctional behavior in the workplace in

the face of certain situations. Such behavior may sometimes be continuous or not occur at all, depending on the personal characteristics of the employees. In addition to the behavior of their management towards them, employees' trust in one another may be effective in influencing the display of such behavior.

The theory of values, which is expressed as 10 different values (power, achievement, hedonism, stimulation, self-direction, universalism, benevolence, tradition, conformity, and security) in the literature, reveals conflicts and harmonious relations between values. Close values are considered as similar motivation, and distant values are considered opposite motivation (Davidov et al., 2008, p. 424). From this point of view, trust, positive behavior of management, and dysfunctional behavior that can be perceived positively and negatively within the organization were examined as both similar and opposite motivational factors. In terms of values, trust and positive behavior were evaluated as close, while dysfunctional behavior was examined as opposite motivation values.

Schwartz, in his theory of values that emphasized moral universal values, stressed that trust is an important human value, as he expresses the value structure at the individual level, and that the behavior of trust includes mutual goodness (Schwartz, 2007, p. 715). He expressed trust as a type of motivational value related to protection (Sagiv & Schwartz, 2000, p. 180). He also evaluated the motivational purpose of trust or security as the security, harmony, and stability of society, relationships, and self (Schwartz & Boehnke, 2004, p. 252). In his research, he emphasized that there are security goals for a person themselves or the people with whom they are identified (such as mutual favors and social order) (Schwartz, 2012, p. 6). In this respect, it is evaluated as security (in the sense of being safe) and trust in terms of relationships in the theory. In this research, the concept of trust was given priority in the mutual relations examined within the concept of security, which is one of the evaluation theory factors. In other words, trust behavior towards the employee was taken into account. Studies show that the positive aspects of mutual goodness in these relations should be emphasized, and the positive behavior of the management towards its employees should also be taken into account.

In terms of the theory of values, the complex motivation structure shapes the trust of individuals in their organizations (Devos et al., 2002, p. 491). Trust is vital in organizations (Hyde, 1993, p. 741). Trust in organizations is the product of successful collective action. In other words, working groups in organizations need to demonstrate trust to perform successful activities. This situation enables complex cooperation efforts in organizations (Leana & Buren, 1999, p. 542-543). In organizations, the management may have increased the security to the extent that they have increased the psychological safety of the employees, the necessity to feel for constructive change, and the organization-based self-confidence of the employees by displaying a formal or informal attitude to the ideas of the employees (Liang et al., 2012, p. 88-89). This shows that trust is an important value for the success of employees' activities.

Personal value priorities are the product of individuals' unique social experiences and distinctive inherited traits. In their daily organizational activities, individuals communicate their important values and the goals that express them with their ideas, preferences, and choices. With their values, individuals affect the goals, norms, practices, and institutional actions, shared perceptions, and interpretations determined by the organization (Sagiv & Schwartz, 2007, p. 183). Roccas et al. (2002, p. 790) stated in their research that values are permanent goals; people see what is important, and they want to reveal their goals by following the important ones. They also stated that values are desirable by individuals and that values are effective in making individuals' behavior, choices, or actions legitimate or valuable.

Although environmental considerations are as important for individuals as well as for organizations, the internal factors of organizations usually play a more important role (Balthazard et al., 2006, p. 710). In organizations, it is often impossible to predict with certainty whether the consequences of a particular action will be positive or negative. For this reason, an action intended to bring about a functional change may have a dysfunctional effect in some cases. Since organizations are characterized by more than one stakeholder and have more goals, a result that is evaluated positively by one stakeholder may be evaluated negatively by another stakeholder (Morrison & Phelps, 1999, p. 416). In this respect, creating organizational structures that protect employees from undesirable behaviors can reduce the likelihood of employees engaging in destructive behavior. In other words, creating a working environment that emphasizes the respectful behavior and protection of employees in organizations can help organizations to conduct studies in a constructive way rather than in interpersonal destructive behavior (Mitchell & Ambrose, 2012, p. 1167). As a result, the interaction of employees' trust in their colleagues, dysfunctional behavior of employees, and positive behavior of management towards their employees can affect the entire organization.

2. Conceptual Framework

2.1 Employees' Trust in Colleagues

To date, no definition of trust has been universally accepted; however, despite differences of opinion, definitions of trust have a common view on various issues (Costa, 2003, p. 606). Trust is a dynamic structure that reflects an individual's beliefs about the relationship between the individual and their environment (Mishra & Spreitzer, 1998, p. 575). In other words, trust creates the dynamic aspect of human relations. In this respect, trust is a process that must be initiated, maintained, repaired, and continually validated. Trust is not a social substance or a mysterious entity. Trust is a social practice defined by preferences (Flores & Solomon, 1998, p. 206). Trust has a significant effect on the risks shared among employees in the organization (Cruwys et al., 2021, p. 76). This situation shows that trust is important for the continuity of organizational activities for employees.

A moral understanding of trust is essential (Cohen & Dienhart, 2013, p. 12). In this respect, an employee who trusts their manager may exhibit a more entrepreneurial attitude than other employees. As a result of a trusting relationship, employees can take more initiative when solving problems for their work. Also, employees can display more energetic and more intrinsic motivation (Costigan et al., 2006, p. 275). Thus, violation of personal trust in organizations can be considered betrayal (Elangovan & Shapiro, 1998, p. 549).

In their research on the theory of values, Schwartz and Sagie (2000, p. 472) found that competition and scarce resources cause conflict in underdeveloped countries where poverty is common, that basic insecurity about the livelihood of individuals is common, and this situation creates a constant security concern for many people. They emphasized that anxiety can be reduced with increasing welfare. This shows that the welfare of the country in which the individuals working in the organization continue their activities can be effective. Schwartz et al. (2012, p. 683) stated that in terms of basic human values, helpfulness, and reliability, individuals should be reliable members of the group they are in.

In his research, Robinson (1996, p. 595) stated that trust can be established not only by influencing not only the reassuring behavior of the parties but also the perceptions of each

party regarding the behavior of the other. Podsakoff et al. (1996, p. 277) concluded that encouraging employees to accept their goals as a group (by their leaders) positively affects employees' trust. Thomas (1998, p. 172) stated that the environment of trust provided by a public institution can contribute to the development of trust-based relationships among individuals. Hopkins and Weathington (2006, p. 493) concluded that trust partially mediates the relationship between fairness, organizational satisfaction, and emotional commitment. They also stated that increasing trust in the workplace reduces the impact of negative decisions made by businesses regarding employees. Colquitt et al. (2007, p. 919) revealed that there is a high correlation between trust in the workplace and the dimension of talent, helpfulness, and integrity. Chen and Ayoko (2012, p. 47) investigated the effects of conflict in the workplace on the emerging emotions and perceptions of trust. They stated that the basis of enthusiasm, excitement, and honesty was positively related to trust, and this contributed to a better understanding of the link between emotions and trust.

2.2 Employee Dysfunction Behavior

The behavior of an employee is often reflected in their actions in the workplace (Burke & Witt, 2004, p. 350). In recent years, concepts such as aggression, anti-social behavior, dysfunctional behavior, misconduct, and misbehavior have been examined in studies on bad behavior (dysfunction) of employees. In addition, concepts such as incapacity for work, workplace abuse, destructive work behavior, maladaptive behavior, wrong organizational behavior, and bullying have also been included in the literature. However, there is no significant study area related to any of these yet (Griffin & Lopez, 2005, p. 989). In this respect, future studies may focus on dysfunctional behavior patterns of employees according to different evaluation situations. In the literature, one type of dysfunctional behavior is expressed as social deprivation. Social deprivation reflects the quality of relationships between superiors and subordinates. It has also been emphasized in the literature that tension can replace dysfunctional behavior (Hirst, 1983, p. 596-603). Therefore, this research aims to gain a perspective, albeit partially, on the dysfunctional behavior of the employees.

Theory of values states that conformity behavior in individuals controls impulses and prevents actions that may harm others (Schwartz & Sagiv, 1995, p. 94). This shows that, as dysfunctional behavior in the organization is inappropriate, it may have been difficult to control impulses and behaviors that may harm others. Schwartz et al. (2000) emphasized that the desired values and desirability of individuals take shape according to the situation. They stated that someone who values social justice will desire justice in the world, while someone who gives little importance to it will not be very interested in injustice in the world. In their research, they stated that an individual's worries can be evaluated as a function of his values (Schwartz et al., 2000, p. 312). Therefore, dysfunctional behavior in research may be caused by different situations that employees desire (like liking laziness). Schwartz (2014, p. 248) evaluated the theory of functionality, stating that elements that functionalize asset values (health, stability, and survival) contribute to personal security. He maintained that the closest element of this theory to his theory can be equivalent to security. He further stated that this situation can express both personal and social goals, such that the individual cannot feel safe when there is an insecure environment, and that this situation is important for well-being, both biologically and in the group. This explanation reveals that it can be evaluated in terms of dysfunctional behavior in the organization and trust in colleagues.

Ramaswami (1996) stated that the loss of flexibility and appreciation and the negative perception of justice and trust are effective in dysfunctional behavior disorders of employees, taking into account the process control (p. 116). According to Van Fleet and Griffin (2006), most of the studies on dysfunctional behaviors employees focused on behavior at the individual level (p. 706). They emphasized that organizational culture can contribute to or distract from dysfunctional behavior. Appelbaum et al. (2007) further stated that for the long-term success of organizations, negative behavior should be prevented in the workplace, and positive behavior should be encouraged by the workplaces to achieve organizational goals (p. 596).

In other studies, Goldman (2008) concluded that mismanagement of bad behavior in the organization increases the effect of dysfunctional behaviors on employees (p. 235). He stated that managers should avoid bad behavior, and it would be more correct for them to act more systematically and strategically in the organization. Cole et al. (2008) concluded that there is a strong relationship between the dysfunctional behavior of employees and negative emotional reactions in teams (p. 953). They stated that the low level of non-verbal negative expressions of the employees caused a decrease in the negative emotional states and negative performances of the employees. Sidle (2011) stated in his research that functional disorders in the workplace may be caused by employee personality disorders (p. 77). Mackenzie et al. (2011) stated that apart from unethical behavior such as theft and corruption, commitment, and satisfaction, as well as the working environment and culture can affect (p. 354).

2.3 Management's Positive Behavior towards Employees

Attitude towards behavior reflects the motivation to engage in certain intentions and behavior. An important factor in determining behavior is the individual's perceptions of the level of control they have in the achievement of the behavior in question (McCarthy et al., 2010, p. 163). Individual behavior in organizations (such as fulfilling responsibilities) may not have much effect individually, but collectively, they can significantly increase the performance of the organization (Podsakoff & MacKenzie, 1997, p. 138). Therefore, management's behavior towards its employees is very important in achieving organizational goals and directing employee activities.

In organizations, management needs to pay attention to the extent to which a task performed contributes to the organizational goals, whatever it may be. They should be able to focus on creating organizational value (Bysted, 2013, p. 280). Thus, management should create an environment where employees can contribute to the production process by fulfilling their assigned tasks (Brown & Myers, 1957, p. 158). For example, if the management in organizations values their employees and encourages them to take care of each other, it may be more likely that employees can act collectively, which would lead to the development of a sense of belonging (Lee & Raschke, 2016, p. 165). In this respect, it is important to examine how the behavior of the management towards the employees (from the perspective of trust) affects the behavior of the employees. In addition, the factors that affect employees' perceptions of reliability are among the issues to be considered (Nikandrou et al., 2000, p. 349–350).

Regarding how positive management behavior relates to the theory of values, Sagiv and Schwartz (2000) stated in their research within the scope of the theory of human values that individuals with positive emotions focus on personal development rather than protecting themselves, and they have the emotional resources to pursue challenging goals (p. 192). This indicates that when the dominance of the possibility of employees reciprocating the

management's positive behavior towards them is taken into account, it can be reflected in the activities of the employees.

Spencer (1986) concluded that the more the opportunities for employees in an organization to express their dissatisfaction and change their unsatisfactory working conditions, the higher the probability of employees remaining in the organization (p. 498). For Klaas (1989), when employees feel that the complaint system is considered fair in their workplaces, their feelings of inequality, which may cause negative results, can be reduced (p. 453). In his study, he emphasized that the perception of justice in organizations can prevent disturbing reactions. He also explained that managers who do not take employee complaints into account may cause a low perception of justice among employees. According to McDaniel et al. (2001), when investigating the moral environment of an organization, there should be consistency in that environment (p. 255). In their studies, they stressed that similar moral behavior should be created among employees for the positive return of personnel policies and employee behavior and for the organizational management to have a consistent moral management model. Weaver (2004) stated that organizations and management are interested in promoting moral (ethical) behavior towards their employees (p. 125). To do this successfully, he proposes that events should be viewed from the perspective of the employees and that it is imperative to create an environment of fair treatment for the employee who takes moral concern seriously in work-related activities.

Other studies such as Tepper et al. (2004) concluded that abusive relationships and controlling subordinates increase the likelihood of distrust and suspicion in employees' intentions (p. 463). They stated in their studies that this situation also interfered with the ability of subordinates to receive support from each other. Cooper et al. (2006) stated that management's commitments within the organization play a primary role in shaping employee behavior (p. 7). Dalal et al. (2011) also concluded that employees' satisfaction with their managers has a moderate relationship with employee satisfaction, and furthermore, satisfaction with management is increasingly associated with global job satisfaction (p. 202–203). Nafei (2014) stated that management can display different behavior to cope with organizational changes (p. 215). He emphasized that a dominant culture in a particular organization may not be as complex as weak cultures or subcultures. He also stated in his research that due to rapid change, managers may have difficulties in the face of the changes created by the changes.

Employees in today's organizations can develop feelings of trust towards each other at work. It is observed that employees sometimes exhibit dysfunctional behavior in addition to these trust behavior in the units in which they work. These behavior of employees in organizations can be shaped by the behavior of organizational management towards the employees. In this respect, this study attempted to measure the mediator effect of the positive behavior of the management towards their employees on the relationship between employees' trust in their colleagues and dysfunctional behavior in the workplace.

3. Method

Employees in today's organizations have certain feelings of trust towards each other. At the same time, employees can sometimes show or be exposed to functional disorder behavior (dysfunctional behaviors) in their work environment. There may be many factors that can cause such dysfunctional behavior in organizations. For example, one of these may be the behavior

of the management towards the employees. This study aimed to measure the mediating effect of management's behavior towards employees on the impact of employees' trust in their colleagues on dysfunctional behavior. The data utilized in the findings and analyses of the study were obtained through an electronic questionnaire administered to a total of 423 people working in different professions in the private and public sectors (firm employees, health personnel, contracted personnel, academicians, civil servants, and others) in the province of Erzurum in Turkey in 2021. The research, attempted to reveal what kinds of relationships there are between the trust among the colleagues of the employees, the dysfunctional behavior of the employees, and the behavior of the management towards the employees. SPSS 21 (general), GSCA (direct effects and general compliance), and AMOS 24 (improved compliance with mediating effects and modification) package programs were used for the research analysis.

During the research, previous studies on the subject were examined and the research scales utilized in the relevant literature were applied to the employees. Feedback was received from 423 employees (80%) out of the 530 people determined as the main study sample, and the research analysis was carried out. The data related to the population that will determine the research universe, using the formula $n = [(Nt^2\, p\, q) / d^2\, (N–1) + t^2\, p\, q]$, $\alpha = 0.05$ margin of error, and 95% confidence level was calculated as the critical value of the research application 2.02. This result implies that the research sample has the power to represent the universe (Özdamar, 2003, p. 40–74). The questionnaire form of the study consisted of two parts. The first part contained six questions about the gender, institution, occupation, age, monthly income, and educational status of the employees. In the second part of the questionnaire, the research participants were asked five questions measuring the trust of the employees in their colleagues, five questions measuring the dysfunctional behavior of the employees, and four questions measuring the positive behavior of the management towards the employees were asked to the research participants. A 5-point Likert scale was employed in the questionnaire.

While the research scales were put into practice, the scales of trust in colleagues of employees contained five items from the studies of Tsui et al. (1997, p. 1107), the scale of dysfunctional behavior of employees contained five items from the research of Ramaswami (1996, p. 118), and the scale of positive behavior of the management towards employees was developed by Thompson (1996, p. 192). These scales were adapted to the research by using four of the scale questions in the research. Unlike the rational choice literature, most of the research on organizational behavior includes empirical data (Robertson & Tang, 1995, p. 78). In this respect, while carrying out the research analysis, previous studies on the subject were examined and accessible sources were used. Unlike previous studies, this study tried to measure the mediating effect of the positive behavior of the management towards their employees (PBM) on the effect of the employees' trust in each other at the workplace (TYC) on dysfunctional behavior (EDB).

The hypotheses about the research carried out are stated below:

H1. Employees' trust in their colleagues in the workplace affects dysfunctional behavior negatively and significantly.

H1b. Employees' trust in their colleagues in the workplace affects the positive behavior of the management towards the employees positively and significantly.

H1c. The positive behavior of the management towards the employees in the workplace affect the dysfunctional behavior of the employees negatively and significantly.

H1a. The positive behavior of the management towards the employees has a mediating effect on the effect of the trust of the employees in the workplace on the dysfunctional behavior (see Figure 1).

Figure 1

Hypothesis Model

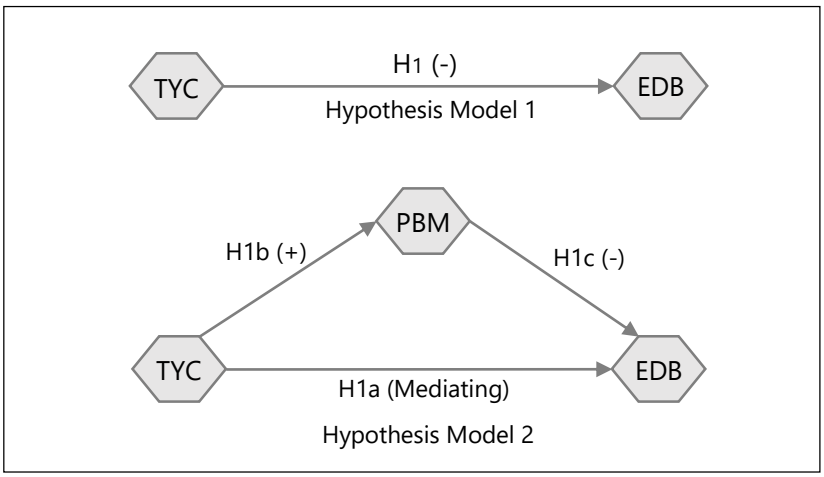

3.1 Findings

About 54.4% (230 people) of the employees who participated in the research were male employees, and 45.6% (193 people) female employees. Research 71.2% (301 people) of the participants in the study were active in the public sector. When the employees were evaluated in terms of profession, 30.5% (129 people) belonged to other professions, 25.1% (106 people) were civil servants, 16.5% (70 people) academicians, 11.6% (49 people) contracted personnel, 8.7% (37 people) health personnel, and 7.6% (32 people) participated in the practice as company employees. When the age ranges of the employees were taken into consideration, it was observed that those who were in the 26–30 age range were, 28.1% (119 people) of employees, and 26.2% (111 people) who are in the 31–35 age range were in the majority. Other age ranges of the participants were listed as 36–40 years (56 people), 25 or below (51 people), 41–45 years (48 people), and 46 and over (38 people). When the employees' monthly incomes were evaluated, it was observed that 22.5% of the participants (95 people) earned in the range of 4401–5600 TL per month, and 21.7% (92 people) were the majority of employees with an income of 5601–6800 TL. In terms of monthly income, other participants 14.2% (60 people) 8001 TL and above, 13% (55 people) 3201–4400 TL, 10.9% (46 people) 2001–3200 TL, 9.7% (41 people) 6801–8000 TL and % 8 (34 people) are listed as 2000 TL and below. Upon evaluation of their educational status, it was seen that 48.9% (207 people) had a master's degree education, 42.1% (178 people) had received a bachelor's degree education, 6.1% (26 people) had an associate degree and 2.8% (12 people) had lycea education.

3.2 Factor and Reliability Analysis

According to the results of factor and reliability analyses revealed by the application (SPSS), the reliability of the entire study was calculated as Cronbach's alpha = .837 and validity as KMO = .803 (see Table 1). In the study, the reliability of the individual scales was calculated as TYC = .886, EDB = .710, and PBM = .795, and their validity was calculated as TYC = .808, EDB = .713 and PBM = .714. The cumulative contribution of all scales to the total variance was found to be = 68,551. With these results, it is seen that the research reveals valid and reliable results (Liang et al., 2012, p. 79; Nafei, 2014, p. 210).

Table 1

Reliability of the Study and Factor Analysis Data (SPSS)

	Research Factors	Factor load
Factor 1: Trust among colleagues [a] (TYC)		
CAG1	I trust my colleagues at my workplace.	**.88**
CAG2	In my workplace, there is an understanding of "team spirit" among my colleagues.	**.93**
CAG3	At my workplace, I usually think about the feelings of other employees.	**.89**
CAG4	In my workplace, we trust each other with our colleagues.	**.94**
CAG5	In my workplace, my co-workers show great integrity.	**.93**
Factor 2: Dysfunctional behavior [b] (EDB)		
FBD1	I ignore some activities related to my job.	**.71**
FBD2	I work on activities that are considered unimportant in my workplace.	**.62**
FBD3	Even though my productivity isn't consistent at work, I try to make it look consistent.	**.80**
FBD4	I try to emphasize my positive aspects at the workplace to the senior management.	**.61**
FBD5	In my workplace, I avoid expressing my negative aspects to the senior management.	**.65**
Factor 3: Positive behavior of management towards employees [c] (PBM)		
YCD1	Mistakes made at my workplace are treated by management as a positive learning experience.	**.81**
YCD2	In my workplace, management encourages employees to openly share their ideas.	**.89**
YCD3	In my workplace, management pays more attention to overall results.	**.76**
YCD4	The emphasis on completing the activities we will do in my workplace increases the quality of our work.	**.68**

Note. N=423. Kaiser-Meyer-Olkin value = .803; Bartlett's Test of Sphericity χ^2 = 3161.213, p = .000; Cumulative variance = 68.551%; Cronbach's α = .837.

[a] Percent of variance = 36.376%, Eigenvalue = 3.737.

[b] Percent of variance = 19.468%, Eigenvalue = 3.007.

[c] Percent of variance = 12.707%, Eigenvalue = 2.852.

When the results of the research were evaluated in terms of factor loads, the CAG4 option provided the highest contribution to the employees' trust in their colleagues. In this option, employees stated that they trusted one another with their colleagues at their workplaces. When evaluated in terms of the dysfunctional behavior of the employees, the FBD3 option made the greatest contribution to the scale. In this option, employees stated that they tried to appear consistent even if they were not consistent at work. Considering the scale of management's positive behavior towards employees, the YCD2 option provided the greatest contribution to the scale. In this option, employees stated that their management in the workplace encourages employees to openly share their ideas.

In Table 2, where the direct effects are revealed, it is observed that the obtained results and the model fit generally provide the construct validity and reliability of the research. FIT (0.515>0.500 in the literature) and AFIT (0.512>0.500 in the literature) values can explain the variance of the model. It is noted that the closer the GFI (0.977>0.90 in the literature) to 1, the better, and the closer the SRMR (0.063<0.080 in the literature) value is to 0, the better (Khuzaini & Zamrudi, 2019, p. 20; Marleno et al., 2018, p. 8). In the studies, AVE (>0.50), Alpha (>0.70) (Marleno et al., 2018, p. 9), Rho (>0.70), HTMT coefficients (<0.90), Fornel Larcker discriminant validity, R^2, and f^2 values have value ranges accepted in the literature (Hair et al., 2017, p. 455-456). The results obtained show that the research is applicable.

Table 2

Research Hypothesis Model 2 Validity and Reliability Direct Effects (GSCA-SEM)

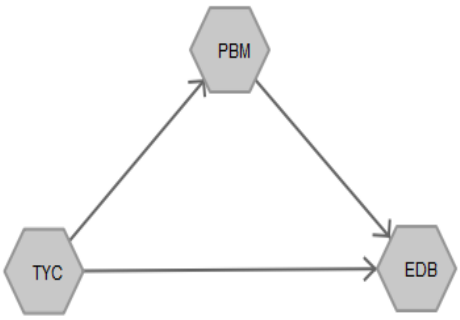

Model fit measures

	Estimate	SE	95%CI	
FIT	0.515	0.011	0.496	0.54
AFIT	0.512	0.011	0.493	0.537
FITs	0.144	0.017	0.114	0.19
FITm	0.594	0.011	0.574	0.617
GFI	0.977	0.005	0.962	0.98
SRMR	0.063	0.006	0.059	0.081
OPE	0.493			
OPEs	0.866			
OPEm	0.413			

Construct quality measures

	TYC	EDB	PBM
AVE	0.704	0.464	0.619
Alpha	0.875	0.707	0.792
Rho	0.917	0.811	0.866
Dimensionality	1.0	1.0	1.0

HTMT

TYC ↔ EDB	0.194
TYC ↔ PBM	0.728
EDB ↔ PBM	0.299

Path coefficients

	Estimate	SE	95%CI	
TYC→EDB	0.039	0.052	-0.067	0.13
PBM→EDB	0.213	0.059	0.102	0.339
TYC→PBM	0.613	0.034	0.551	0.697

Fornell-Larcker criterion values

	TYC	EDB	PBM
TYC	0.839		
EDB	0.169	0.681	
PBM	0.613	0.236	0.787

R squared values of components in structural model

TYC	EDB	PBM
-0.0	0.057	0.375

F squared values

	TYC	EDB	PBM
TYC	0.0	0.001	0.601
EDB	0.0	0.0	0.0
PBM	0.0	0.047	0.0

3.3 Structural Equation Model Results of Research Model 1

Considering the values obtained from the Research Model 1 results and the acceptable ranges in the literature (see Table 3) it is understood that the research is applicable (Holste & Fields, 2010, p. 134).

Table 3

Literature Indexes and Research Model Results of Model 1 (AMOS)

Literature Indexes	Acceptable Values	Research Model
RMSEA	.05<RMSEA≤.08	.068
CMIN/DF	0<χ2/sd ≤ 5	2.967
IFI	>.90	.972
TLI	>.90	.959
CFI	>.90	.972
RMR	<.1	.068

Considering the results of the research's regression measurement model in Table 4, it is observed that employees' trust in their colleagues had a positive (.115) and significant ($p < .05$, $p = .000$) effect on the dysfunctional behavior of employees (H1 rejected). This result indicates that the H1 hypothesis was rejected. The result of the analysis of the H1 hypothesis in the research is presented in Figure 2.

Table 4

Results of the Research's Regression Measurement Model

Associations in the Model			Standardize β	S.E.	p	Hypothesis	Explanation
TYC	->	EDB	.115	.032	***	H1	Reject

Figure 2

Model 1 Structural Equation Model Result

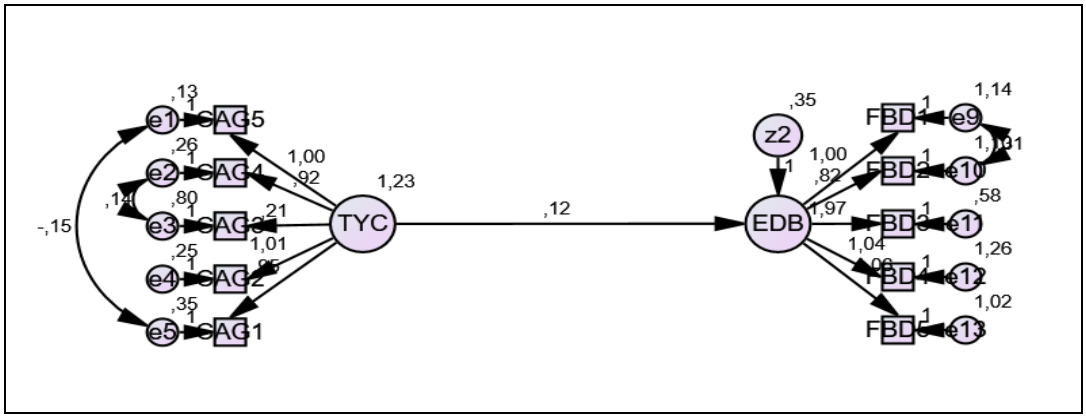

Considering the results presented in Figure 2, it is evident that the employees' trust in their colleagues positively and significantly affected their dysfunctional behavior. This result however reveals that the high level of trust among employees may lead to an increase in dysfunctional behavior. In the results obtained from Research Model 1, modifications were made within the scales themselves.

3.4 Research Model 2 Structural Equation Model Results Obtained

Considering the acceptable value ranges of the results obtained in Table 5 of the study and the literature indices, it is clear that the study has acceptable value ranges. These results reveal that the research is applicable (Rahimnia & Sharifirad, 2015, p. 370). To determine the mediating effect in the research, previous studies were examined and the mediating effect model was created accordingly. In previous studies, variables whose mediation effect was expressed in the first model (Model 1 in the study; the effect of employees' trust in colleagues on employee dysfunction by considering into account the standardized β values) were taken into account. Then, the mediating effect model implemented in the second model (Model 2 the standardized β value that expresses the mediating effect of the management's behavior towards the employees in the effect of the employees on the dysfunctional behavior of their colleagues) was also taken into account. In this case, however, if the standardized β value with mediating effect becomes meaningless and the degree of the effect decreases, it can be mentioned that there is a mediating effect in the research scale. When evaluated from another point of view in the mediating model, if the effect of the independent variable on the dependent variable decreases and the p-value becomes statistically insignificant ($p > .05$), then there is a full mediation effect on the scale. If the p-value is between 0 and 0.05 ($0 < p < .05$), then there is a partial mediation effect (Baron & Kenny, 1986, p. 1176; Hopkins & Weathington, 2006, p. 490; Chen & Ayoko, 2012, p. 36-46; Sania et al., 2015, p. 16).

Table 5

Literature Indexes and Research Model Results

Literature Indexes	Acceptable Values	Research Model
RMSEA	.05<RMSEA≤.08	.080
RMR	<.1	.093
CMIN/DF	0< χ2/sd ≤ 5	3.711
CFI	>.90	.940
IFI	>.90	.940
TLI	>.90	.921

Table 6

Results of the Research's Mediator Effected Regression Measurement Model

Associations in the Model			Standardize β	S.E.	p	Hypothesis	Explanation
TYC	->	PBM	.537	.046	***	H1b	Acceptance
PBM	->	EDB	.144	.054	**.007**	H1c	Reject
TYC	->	EDB	.038	.042	**.359**	H1a	Acceptance

The results of the study in Table 6 illustrate that the trust of the employees in their colleagues positively affected the behavior of the managers towards the employees (.537) and significantly ($p < .05$, $p = .000$) (H1b accepted). Also, the positive behavior of the managers towards the employees affected the dysfunctional behavior of the employees positively (.144) and significantly ($p < .05$, $p = .007$) (H1c rejected). In addition, the positive behavior of the managers towards the employees had a full mediator effect ($p > .05$, $p = .359$ and the standardized β value decreased 'that is, it decreased from .114 to .038) on the effect of the employees' trust in their colleagues on the dysfunctional behavior of the employees (H1a accepted). These results reveal that the H1b and H1a hypotheses were accepted and the H1c

hypothesis was rejected. The application results of Study Model 2 are expressed in Figure 3 and the relevant results are interpreted.

Figure 3

Model 2 Structural Equation Model Result

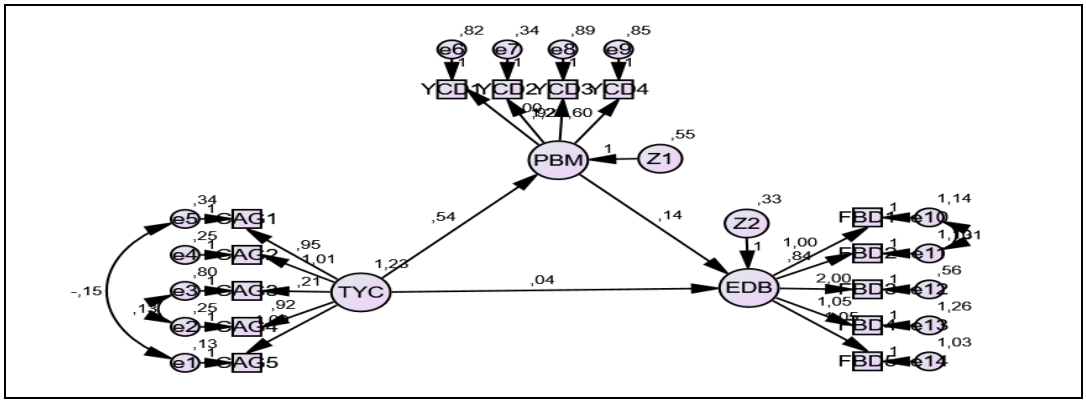

Based on the data obtained in Figure 3 and Table 6 the H1a and H1b hypotheses were accepted, while the H1c hypothesis was rejected. That is, the employees' trust in their colleagues positively and significantly affected the positive behavior of the management towards the employees (H1b), the positive behaviors of the management towards the employees positively and significantly affected the dysfunctional behavior of the employees (H1c), and the management's behavior towards the employees had a full mediator effect on the impact of the employees' trust in their colleagues on dysfunctional behavior (H1a). These results show that there is a linear relationship between the trust of the employees in their colleagues and the positive behavior of the management towards the employees, and an inverse relationship between the positive behavior of the management towards the employees and the dysfunctional behavior of the employees.

4. Conclusion and Discussion

Today, the trust of individuals working in different positions in their colleagues, dysfunctional behavior, and positive behavior of management towards employees is of great importance for organizations to continue their existence into the future. As mentioned above, upon evaluation of this reseach's results, two of the four hypotheses were accepted and the other two were rejected. It was concluded that the employees' trust in their colleagues has positive and significant effects on the dysfunctional behavior of the employees, employees' trust in their colleagues has positive and significant effects on the management's positive behavior towards the employees, and management's positive behavior towards employees have positive and significant effects on dysfunctional behavior of the employees has been reached. In addition, it was concluded that the positive behavior of the management towards their employees has a full mediator effect on the impact of employees' trust in one another on dysfunctional behavior.

When examined in relation to the theory of universal values, the results show that trust behavior can also have positive contributions to undesirable behavior (such as dysfunctional behavior). In other words, trust in colleagues led to an increase in dysfunctional behavior. This result can bring new perspectives to the theory. Nonetheless, in this research, the contribution of trust behavior to the positive behavior of the management towards its employees creates a result that supports the theory of values. Schwartz and Bilsky (1987) noted in their research

that values can include harmony and contradictions. The trust in colleagues, dysfunctional behavior, and positive behavior of management in the organization reveal both harmony and conflict situations. Schwartz (2007) stated that the behavior of trust includes mutual benevolence. The trust of the employees in each other contributed positively to the positive behaviors of the management. This result also provides important contributions to the theory of values by showing that trust produces mutually positive results. Schwartz (2014) however provided important organizational criticisms and contributions to his research when he stated that functionality and trust are related and equivalent to each other. Thus, in addition to the significant relationship between trust and dysfunctional behavior, this research revealed that trust in colleagues increases dysfunctional behavior. This indicates that the opposite of functionality is also related to trust and may produce an opposite result.

Employees' trust in one another in the workplace affects dysfunctional behavior positively and significantly. This may be because trust among employees can increase their ability to move freely, thus, easily leading them to exhibit dysfunctional behavior. The ability of employees to feel safe may also have resulted in the display of functional disorder behavior. Ramaswami (1996) pointed out that when process control is taken into consideration, loss of flexibility and appreciation and negative perception of justice and trust may be effective in dysfunctional behavior disorders of employees. Contraririly, in this study the trust of the employees towards one another positively affected their dysfunctional behavior. Hopkins and Weathington (2006) stated that increasing trust in the workplace can reduce the impact of negative decisions made by organizations on employees. In this study, although the negative decisions of the organizations were not examined, the positive behavior of the management towards its employees was considered and it was observed that this positively affected the dysfunctional behavior of the employees. Also, it was concluded that trust among employees positively affects dysfunctional behavior. In their study, Chen and Ayoko (2012) emphasized that the basis of excitement, enthusiasm, and honesty was positively related to trust, and this result contributed to a better understanding of the link between emotions and trust. In the results obtained, in this research, honesty, excitement, and enthusiasm may have been effective in the trust behavior of the employees to each other.

Employees' trust in one another positively and significantly affects the management's positive behaviors. Individuals who are at the managerial level in their workplaces can positively evaluate their employees' trust in one another from their perspective. This result reveals that the environment of trust in the work environment causes superiors to exhibit positive behaviors. Robinson (1996) explained that trust can be created by affecting the perceptions of individuals towards the behavior of others as a result of his study. This result reveals that employees' trust in each other may be shaped by their perceptions. McDaniel et al. (2001) noted in their research that for the management to have a consistent moral management model, similar moral behavior should be created among employees for the positive result of personnel policies and employee behavior. This shows that the moral behavior of employees can be as effective as their feelings of trust in their working environment.

The positive and meaningful effects of the management's positive behaviors towards employees reveal that the positive behavior of management can be abused (used negatively) functionally by the employees. This indicates that managers should consider the concept of discipline in addition to their positive behavior, or that management behavior perceived positively by employees may trigger functional disorder behavior. Weaver (2004) stated that the management is interested in promoting moral behavior towards its employees and to do

this successfully, they should be able to look at events from the perspective of the employees. Although the research reveals that the management may have the ability to look from the perspective of the employees when they display positive behavior towards the employees, the fact that this situation affects the dysfunctional behavior of the employees positively reveals that this situation should be internalized. Van Fleet and Griffin (2006) stated that organizational culture can prevent dysfunctional behavior and the results in this research show that the culture of the organizations where the employees are present can be effective in exhibiting this behavior. Sidle (2011) also emphasized in his study that personality disorders can cause functional disorders in the workplace and the results herein indicate that the personalities of the employees can also be effective.

The full mediator effect of the positive behavior of the managers towards their employees on the effect of employees' trust in their colleagues on dysfunctional behaviors; reveals that the positive behavior shown by the management have a great effect on the trust and dysfunctional behavior patterns of individuals working in the workplaces towards each other. In other words, the mediator variable (PBM) plays an important role in the effect of the independent variable (TYC) on the dependent variable (EDB). Hwan Choi et al. (2004) stated that trust in the manager mediates the relationship between manager involvement and dysfunctional behavior. In this study, the positive behavior of the management mediated the relationship between trust in colleagues and dysfunctional behavior, thus, revealing that an organization's management has an important intermediary role in employee relations. Cooper et al. (2006) noted that the commitment of managers within the organization plays a primary role in shaping employee behavior. And in this research, it is revealed that the positive behavior of the management towards the employees have a full mediating effect (on the behavior of trust and dysfunction), and the probability of being loyal to the organization is high.

In the results obtained that the individual's trust in his colleague leads to dysfunctional behavior may be due to the feeling of comfort regarding the individual's activities. That the trust of the individual in his colleagues supports the positive behavior of the management shows that the environment of trust in the workplace reflects positively on the management. This reveals that trust is mutual and effective in subordinate-superior relations. The contribution of the positive behavior of management to dysfunctional behavior in the organization shows that the employees do not perceive the workplace environment as authoritarian. That the positive behavior of the management has a mediating effect on the effect of trust in colleagues on dysfunctional behavior further shows that management has an important place in the activities of the employees.

As a result, the organizational structure in workplaces can be viewed as a whole. Within this whole, the employees' trust in each other and dysfunctional behavior can be shaped by the positive behavior of management towards their employees. The fact that all the scale questions created herein were asked of the employees can provide realistic results regarding how the positive behavior of the management towards their employees are perceived by the employees. From this point of view, these results can bring a different perspective to the literature.

Limitations of Research and Future Research

The research is limited to people working in different professions in the public and private sectors in Erzurum in Turkey. In the research, questions were asked to measure the trust behavior of employees, dysfunctional behavior, and positive behavior of the management. In terms of the theory of values, trust and positive behavior in the organization can find new

research areas in the literature within the framework of desired values, and dysfunctional behavior within the framework of undesirable values. Future studies, can investigate what the positive or negative aspects of the positive behavior of management towards its employees may be and what effects these behavior may have on the performance or motivation of employees. In addition, for organizations to achieve their goals, research can be done on whether management's display of "positive behavior, negative behavior or balanced behavior" to their employees may have more positive contributions to the organization. Do employees contribute more to their organization with management's positive behavior? Do the negative behaviors of the management create disruptions in the organizational activities of the employee? To what extent does management's policy of balanced behavior regulate the employee's organizational activities? Questions such as these can be answered. In addition, future research can investigate the main factors that lead employees to dysfunctional behavior.

ACKNOWLEDGEMENTS
I would like to thank the employees who participated in the research, the editors of the International Journal of Social Inquiry and the anonymous reviewers.

FUNDING
No financial support was received from any person or institution for the study.

ETHICS
The ethical approval of this research was obtained by Gümüşhane University Scientific Research and Publication Ethics Committee (Approval No: 2021/2, Date: 10 March 2021).

CONFLICT OF INTEREST
The author declares no conflict of interest.

References

Appelbaum, S. H., Iaconi, G. D., & Matousek, A. (2007). Positive and negative deviant workplace behaviors: Causes, impacts, and solutions. *Corporate Governance: The International Journal of Business in Society*, *7*(5), 586–598. https://doi.org/10.1108/14720700710827176

Balthazard, P. A., Cooke, R. A., & Potter, R. E. (2006). Dysfunctional culture, dysfunctional organization: Capturing the behavioral norms that form organizational culture and drive performance. *Journal of Managerial Psychology*, *21*(8), 709–732. https://doi.org/10.1108/02683940610713253

Bardi, A., & Schwartz, S. H. (2003). Values and behavior: Strength and structure of relations. *Personality and Social Psychology Bulletin*, *29*(10), 1207–1220. https://doi.org/10.1177/0146167203254602

Baron, R. M., & Kenny, D. A. (1986). The moderator–mediator variable distinction in social psychological research: Conceptual, strategic, and statistical considerations. *Journal of Personality and Social Psychology*, *51*(6), 1173–1182. https://doi.org/10.1037/0022-3514.51.6.1173

Brown, D. V., & Myers, C. A. (1957). Management's attitudes toward employees and unions. *Monthly Labor Review*, *80*(2), 157–160.

Burke, L. A., & Witt, L. A. (2004). Personality and high-maintenance employee behavior. *Journal of Business and Psychology*, *18*(3), 349–363.

Bysted, R. (2013). Innovative employee behaviour: The moderating effects of mental involvement and job satisfaction on contextual variables. *European Journal of Innovation Management*, *16*(3), 268–284. https://doi.org/10.1108/EJIM-09-2011-0069

Chen, M. J., & Ayoko, O. B. (2012). Conflict and trust: The mediating effects of emotional arousal and self-conscious emotions. *International Journal of Conflict Management*, *23*(1), 19–56. https://doi.org/10.1108/10444061211199313

Cohen, M. A., & Dienhart, J. (2013). Moral and amoral conceptions of trust, with an application in organizational ethics. *Journal of Business Ethics*, *112*(1), 1–13. https://doi.org/10.1007/s10551-012-1218-5

Cole, M. S., Walter, F., & Bruch, H. (2008). Affective mechanisms linking dysfunctional behavior to performance in work teams: A moderated mediation study. *The Journal of Applied Psychology*, *93* (5), 945–958. https://doi.org/10.1037/0021-9010.93.5.945

Colquitt, J. A., Scott, B. A., & LePine, J. A. (2007). Trust, trustworthiness, and trust propensity: A meta-analytic test of their unique relationships with risk taking and job performance. *Journal of Applied Psychology*, *92*(4), 909–927. https://doi.org/10.1037/0021-9010.92.4.909

Cooper, D., & Fiosh, C. P. C. (2006). *The Impact of Management's Commitment on Employee Behavior: A Field Study*. 7th Professional Development Conference & Exhibition. https://www.behavioral-safety.com/articles/Impact_of_Management_Commitment.pdf

Costa, A. C. (2003). Work team trust and effectiveness. *Personnel Review*, *32*(5), 605–622. https://doi.org/10.1108/00483480310488360

Costigan, R. D., Insinga, R. C., Berman, J. J., Ilter, S. S., Kranas, G., & Kureshov, V. A. (2006). The effect of employee trust of the supervisor on enterprising behavior: A cross-cultural comparison. *Journal of Business and Psychology*, *21*(2), 273–291. https://doi.org/10.1007/s10869-006-9029-2

Cruwys, T., Greenaway, K. H., Ferris, L. J., Rathbone, J. A., Saeri, A. K., Williams, E., Parker, S. L., Chang, M. X.-L., Croft, N., Bingley, W., & Grace, L. (2021). When trust goes wrong: A social identity model of risk taking. *Journal of Personality and Social Psychology*, *120*(1), 57–83. https://doi.org/10.1037/pspi0000243

Dalal, R. S., Bashshur, M. R., & Credé, M. (2011). The forgotten facet: Employee satisfaction with management above the level of immediate supervision. *Applied Psychology*, *60*(2), 183–209. https://doi.org/10.1111/j.1464-0597.2010.00431.x

Davidov, E., Schmidt, P., & Schwartz, S. H. (2008). Bringing values back in: The adequacy of the European social survey to measure values in 20 countries. *Public Opinion Quarterly*, *72*(3), 420–445. https://doi.org/10.1093/poq/nfn035

Devos, T., Spini, D., & Schwartz, S. H. (2002). Conflicts among human values and trust in institutions. *British Journal of Social Psychology*, *41*(4), 481-494. https://doi.org/10.1348/014466602321149849

Elangovan, A. R., & Shapiro, D. L. (1998). Betrayal of trust in organizations. *Academy of Management Review*, *23*(3), 547–566. https://doi.org/10.5465/amr.1998.926626

Flores, F., & Solomon, R. C. (1998). Creating trust. *Business Ethics Quarterly*, *8*(2), 205–232. https://doi.org/10.2307/3857326

Goldman, A. (2008). Company on the couch: Unveiling toxic behavior in dysfunctional organizations. *Journal of Management Inquiry*, *17*(3), 226–238. https://doi.org/10.1177/1056492608318157

Griffin, R. W., & Lopez, Y. P. (2005). "Bad behavior" in organizations: A review and typology for future research. *Journal of Management*, *31*(6), 988–1005. https://doi.org/10.1177/0149206305279942

Hair, J., Hollingsworth, C. L., Randolph, A. B., & Chong, A. Y. L. (2017). An updated and expanded assessment of PLS-SEM in information systems research. *Industrial Management & Data Systems*, *117*(3), 442–458. https://doi.org/10.1108/IMDS-04-2016-0130

Hirst, M. K. (1983). Reliance on accounting performance measures, task uncertainty, and dysfunctional behavior: Some extensions. *Journal of Accounting Research*, *21*(2), 596–605. https://doi.org/10.2307/2490793

Holste, J. S., & Fields, D. (2010). Trust and tacit knowledge sharing and use. *Journal of Knowledge Management*, *14*(1), 128–140. https://doi.org/10.1108/13673271011015615

Hopkins, S. M., & Weathington, B. L. (2006). The relationships between justice perceptions, trust, and employee attitudes in a downsized organization. *The Journal of Psychology*, *140*(5), 477–498. https://doi.org/10.3200/JRLP.140.5.477-498

Hwan Choi, N., Dixon, A. L., & Jung, J. M. (2004). Dysfunctional behavior among sales representatives: The effect of supervisory trust, participation, and information controls. *Journal of Personal Selling & Sales Management*, *24*(3), 181–198. https://doi.org/10.1080/08853134.2004.10749030

Hyde, A. (1993). Ownership, contract, and politics in the protection of employees against risk. *The University of Toronto Law Journal*, *43*(3), 721–749. https://doi.org/10.2307/825728

Khuzaini, Zainul, M., & Zamrudi, Z. (2019). Organizational citizenship and employee performance: The role of spirituality. *Pakistan Administrative Review*, *3*(1), 16–26. https://nbn-resolving.org/urn:nbn:de:0168-ssoar-62777-7

Klaas, B. S. (1989). Determinants of grievance activity and the grievance system's impact on employee behavior: An integrative perspective. *Academy of Management Review*, *14*(3), 445–458. https://doi.org/10.5465/amr.1989.4279079

Leana, C. R., & Van Buren, H. J. (1999). Organizational social capital and employment practices. *Academy of Management Review*, *24*(3), 538–555. https://doi.org/10.5465/amr.1999.2202136

Lee, M. T., & Raschke, R. L. (2016). Understanding employee motivation and organizational performance: Arguments for a set-theoretic approach. *Journal of Innovation & Knowledge*, *1*(3), 162–169. https://doi.org/10.1016/j.jik.2016.01.004

Liang, J., Farh, C. I. C., & Farh, J.-L. (2012). Psychological antecedents of promotive and prohibitive voice: A two-wave examination. *Academy of Management Journal*, *55*(1), 71–92. https://doi.org/10.5465/amj.2010.0176

MacKenzie, C., Garavan, T. N., & Carbery, R. (2011). Understanding and preventing dysfunctional behavior in organizations: Conceptualizing the contribution of human resource development. *Human Resource Development Review*, *10*(4), 346–380. https://doi.org/10.1177/1534484311417549

Marleno, R., Surjokusumo, S., Oetomo, W., Setiawan, M. I., & Abdullah, D. (2018). The influence of stakeholder factors affecting the success of construction projects in Indonesia. *Journal of Physics: Conference Series*, *1114*, 1–14. https://doi.org/10.1088/1742-6596/1114/1/012135

McCarthy, A., Darcy, C., & Grady, G. (2010). Work-life balance policy and practice: Understanding line manager attitudes and behaviors. *Human Resource Management Review*, *20*(2), 158–167. https://doi.org/10.1016/j.hrmr.2009.12.001

McDaniel, C., Shoeps, N., & Lincourt, J. (2001). Organizational ethics: Perceptions of employees by gender. *Journal of Business Ethics*, *33*(3), 245–256. https://doi.org/10.1023/A:1017593508147

Mishra, A. K., & Spreitzer, G. M. (1998). Explaining how survivors respond to downsizing: The roles of trust, empowerment, justice, and work redesign. *Academy of Management Review*, *23*(3), 567–588. https://doi.org/10.5465/amr.1998.926627

Mitchell, M. S., & Ambrose, M. L. (2012). Employees' behavioral reactions to supervisor aggression: An examination of individual and situational factors. *Journal of Applied Psychology*, *97*(6), 1148–1170. https://doi.org/10.1037/a0029452

Morrison, E. W., & Phelps, C. C. (1999). Taking charge at work: Extrarole efforts to initiate workplace change. *Academy of Management Journal*, *42*(4), 403–419. https://doi.org/10.5465/257011

Nafei, W. (2014). Assessing employee attitudes towards organizational commitment and change: The Case of King Faisal Hospital in Al-Taif Governorate, Kingdom of Saudi Arabia. *Journal of Management and Sustainability*, *4*(1), 204–219. https://doi.org/10.5539/jms.v4n1p204

Nikandrou, I., Papalexandris, N., & Bourantas, D. (2000). Gaining employee trust after acquisition: Implications for managerial action. *Employee Relations*, *22*(4), 334–355. https://doi.org/10.1108/01425450010340344

Özdamar, K. (2003). *Modern Bilimsel Araştırma Yöntemleri* [Modern Scientific Research Methods]. Kaan Kitabevi.

Podsakoff, P. M., MacKenzie, S. B., & Bommer, W. H. (1996). Transformational leader behaviors and substitutes for leadership as determinants of employee satisfaction, commitment, trust, and organizational citizenship behaviors. *Journal of Management*, *22*(2), 259–298. https://doi.org/10.1177/014920639602200204

Podsakoff, P. M.& Mackenzie, S. B. (1997). Impact of organizational citizenship behavior on organizational performance: A review and suggestion for future research. *Human Performance*, *10*(2), 133–151. https://doi.org/10.1207/s15327043hup1002_5

Rahimnia, F., & Sharifirad, M. S. (2015). Authentic leadership and employee well-being: The mediating role of attachment insecurity. *Journal of Business Ethics*, *132*(2), 363–377. https://doi.org/10.1007/s10551-014-2318-1

Ramaswami, S. N. (1996). Marketing controls and dysfunctional employee behaviors: A test of traditional and contingency theory postulates. *Journal of Marketing*, *60*(2), 105–120. https://doi.org/10.2307/1251934

Robertson, P. J., & Tang, S.-Y. (1995). The role of commitment in collective action: Comparing the organizational behavior and rational choice perspectives. *Public Administration Review*, *55*(1), 67–80. https://doi.org/10.2307/976829

Robinson, S. L. (1996). Trust and breach of the psychological contract. *Administrative Science Quarterly*, *41*(4), 574–599. https://doi.org/10.2307/2393868

Roccas, S., Sagiv, L., Schwartz, S. H., & Knafo, A. (2002). The Big Five personality factors and personal values. *Personality and Social Psychology Bulletin*, *28*(6), 789–801. https://doi.org/10.1177/0146167202289008

Sagiv, L., & Schwartz, S. H. (2000). Value priorities and subjective well-being: Direct relations and congruity effects. *European Journal of Social Psychology*, *30* (2), 177–198. https://doi.org/10.1002/(SICI)1099-0992(200003/04)30:2<177::AID-EJSP982>3.0.CO;2-Z

Sagiv, L., & Schwartz, S. H. (2007). Cultural values in organisations: Insights for Europe. *European Journal of International Management*, *1* (3), 176–190. https://doi.org/10.1504/EJIM.2007.014692

Sania, U., Kalpina, K., & Javed, H. (2015). Diversity, employee morale and customer satisfaction: The three musketeers. *Journal of Economics, Business and Management*, *3* (1), 11–18. https://doi.org/10.7763/JOEBM.2015.V3.147

Schwartz, S. H. (2007). Universalism values and the inclusiveness of our moral universe. *Journal of Cross-Cultural Psychology*, *38* (6), 711–728. https://doi.org/10.1177/0022022107308992

Schwartz, S. (2012). An overview of the Schwartz theory of basic values. *Online Readings in Psychology and Culture*, *2* (1), 1–20. https://doi.org/10.9707/2307-0919.1116

Schwartz, S. H. (2014). Functional theories of human values: Comment on Gouveia, Milfont, and Guerra (2014). *Personality and Individual Differences*, *68*, 247–249. https://doi.org/10.1016/j.paid.2014.03.024

Schwartz, S. H., & Boehnke, K. (2004). Evaluating the structure of human values with confirmatory factor analysis. *Journal of Research in Personality*, *38* (3), 230–255. https://doi.org/10.1016/S0092-6566(03)00069-2

Schwartz, S. H., Cieciuch, J., Vecchione, M., Davidov, E., Fischer, R., Beierlein, C., Ramos, A., Verkasalo, M., Lönnqvist, J.-E., Demirutku, K., Dirilen-Gumus, O., & Konty, M. (2012). Refining the theory of basic individual values. *Journal of Personality and Social Psychology*, *103*(4), 663–688. https://doi.org/10.1037/a0029393

Schwartz, S. H., & Sagie, G. (2000). Value consensus and importance: A cross-national study. *Journal of Cross-Cultural Psychology*, *31*(4), 465–497. https://doi.org/10.1177/0022022100031004003

Schwartz, S. H., Sagiv, L., & Boehnke, K. (2000). Worries and values. *Journal of Personality*, *68*(2), 309–346. https://doi.org/10.1111/1467-6494.00099

Schwartz, S. H., & Sagiv, L. (1995). Identifying culture-specifics in the content and structure of values. *Journal of Cross-Cultural Psychology*, *26*(1), 92–116. https://doi.org/10.1177/0022022195261007

Schwartz, S. H., & Bilsky, W. (1987). Toward a universal psychological structure of human values. *Journal of Personality and Social Psychology*, *53*(3), 550–562. https://doi.org/10.1037/0022-3514.53.3.550

Sidle, S. D. (2011). Personality disorders and dysfunctional employee behavior: How can managers cope? *Academy of Management Perspectives*, *25*(2), 76–77. https://doi.org/10.5465/amp.25.2.76

Spencer, D. G. (1986). Employee voice and employee retention. *Academy of Management Journal*, *29*(3), 488–502. https://doi.org/10.5465/256220

Tepper, B. J., Duffy, M. K., Hoobler, J., & Ensley, M. D. (2004). Moderators of the relationships between coworkers' organizational citizenship behavior and fellow employees' attitudes. *Journal of Applied Psychology*, *89*(3), 455–465. https://doi.org/10.1037/0021-9010.89.3.455

Thomas, C. W. (1998). Maintaining and restoring public trust in government agencies and their employees. *Administration & Society*, *30*(2), 166–193. https://doi.org/10.1177/0095399798302003

Thompson, J. W. (1996). Employee attitudes, organizational performance, and qualitative factors underlying success. *Journal of Business and Psychology*, *11*(2), 171–196. https://doi.org/10.1007/BF02193858

Tsui, A. S., Pearce, J. L., Porter, L. W., & Tripoli, A. M. (1997). Alternative approaches to the employee-organization relationship: Does investment in employees pay off? *Academy of Management Journal*, 40*(5)*, 1089–1121. https://doi.org/10.5465/256928

Van Fleet, D. D., & Griffin, R. W. (2006). Dysfunctional organization culture: The role of leadership in motivating dysfunctional work behaviors. *Journal of Managerial Psychology*, *21*(8), 698–708. https://doi.org/10.1108/02683940610713244

Weaver, G. R. (2004). Ethics and employees: Making the connection. *Academy of Management Perspectives*, *18*(2), 121–125. https://doi.org/10.5465/ame.2004.13836241

Genişletilmiş Özet

Organizasyonlarda değerli olduğu düşünülen birçok davranış şekli çalışanların birbirleri ile olan ilişkilerini şekillendirebilmektedir. Organizasyonda güven ve olumlu davranış istenen değerler, işlevsiz davranış istenmeyen değer veya değersiz bir kavram olarak nitelendirilebilir. Günümüz çalışma ortamları, çalışanların birbirlerine karşı güven duygusu geliştirebildikleri dinamik yapılardan oluşmaktadır. Bu yapılarda çalışanlar iş yerlerinde belirli durumlar karşısında işlevsiz davranış sergileyebilmektedirler. Bu davranışlar çalışanların kişisel özelliklerine göre sürekli olabilir veya hiç ortaya çıkmayabilir. Çalışanların bu tarz davranışlar sergilemelerinde yönetimlerinin onlara karşı davranışlarının yanında çalışanların birbirlerine olan güvenleri etkili olabilir. Araştırmada çalışanların iş yerlerinde birbirlerine olan güvenlerinin fonksiyon bozukluğu davranışları üzerindeki etkisinde yönetimin çalışanına olumlu davranışı, değerler kuramı açısından önemli sonuçlar oluşturabilir.

Günümüzde çeşitli alanlarda farklı pozisyonlarda çalışan bireylerin iş yerlerinde çalışma arkadaşlarına olan güvenleri ve yönetimin çalışanlara karşı olumlu davranışları örgütlerin geleceğine pozitif, çalışanların işlevsiz davranışlarının ise negatif etkileri olabilir. Araştırma sonuçları genel olarak değerlendirildiğinde oluşturulan dört hipotezden iki tanesi kabul, ikisi red edilmiştir. Çalışanın çalışma arkadaşına olan güveninin fonksiyon bozukluğu davranışı üzerinde pozitif ve anlamlı etkisinin olduğu; çalışanın çalışma arkadaşına güveninin yönetimin çalışanına karşı olumlu davranış sergilemesine yine pozitif ve anlamlı etkisinin olduğu; yönetimin çalışanına olumlu davranış sergilemesinin çalışanın fonksiyon bozukluğu davranışına da pozitif ve anlamlı etkisinin olduğu sonuçlarına erişilmiştir. Araştırmada çalışanların birbirlerine karşı olan güvenlerinin fonksiyon bozukluğu davranışları üzerindeki etkisinde yönetimin çalışanlarına olumlu davranış sergilemelerinin tam aracı etkiye sahip olduğu sonuçlarına ulaşılmıştır.

Araştırma sonuçları evrensel değerler kuramı açısından incelendiğinde; güven davranışının işlevsiz davranışlara olumlu katkıları olabileceğini göstermektedir. Çalışma arkadaşına güven işlevsiz davranışın artmasına yol açmıştır. Bu sonuç kurama yeni bakış açıları kazandırabilir. Güven davranışının yönetimin çalışanlarına karşı olumlu davranışlarına olan katkısı ise değerler kuramını destekleyen bir sonuç oluşturmaktadır. Araştırmada güvenin işlevsiz davranış üzerindeki etkisinde yönetimin olumlu davranışının tam aracı etkisi de genel olarak değerler kuramına önemli katkılar sağlamaktadır. Değerler kuramı açısından organizasyonda güven ve olumlu davranış arzu edilen değerler, işlevsiz davranışlar ise arzu edilmeyen değerler çerçevesinde literatürde yeni araştırma alanları bulabilir.